TRANSACTIONS

OF THE

Institution of Engineers and Shipbuilders

IN SCOTLAND

(INCORPORATED).

VOLUME XLIV.

FORTY-FOURTH SESSION, 1900-1901.

EDITED BY THE SECRETARY.

GLASGOW:
PUBLISHED BY THE INSTITUTION AT
207 BATH STREET.

1901.

OFFICE-BEARERS.

FORTY-FOURTH SESSION, 1900-1901

President.

ROBERT CAIRD, LL.D., F.R.S.E.

Vice-Presidents.

PROF. ARCHIBALD BARR, D.Sc.
ARCHIBALD DENNY.
WILLIAM FOULIS.

Councillors

WILLIAM BEARDMORE.
A. S. BIGGART.
THOMAS KENNEDY.
HENRY A. MAVOR.
R. T. MOORE.

PROF. J. H. BILES.
W. A. CHAMEN.
CHARLES C. LINDSAY.
JAMES MOLLISON.
JAMES WEIR.

Finance Committee.

ROBERT CAIRD, *Convener.*
ARCHIBALD DENNY.
WILLIAM FOULIS.
THOMAS KENNEDY.

Library Committee.

HENRY A. MAVOR, Hon. Lib., *Convener.*
Prof. J. H. BILES.
JAMES MOLLISON.
R. T. MOORE.

Honorary Councillors—Past Presidents.

JAMES M. GALE.
HAZELTON R. ROBSON.
JOHN INGLIS, LL.D.
Sir WILLIAM ARROL, LL.D., M.P.
GEORGE RUSSELL.

House Committee.

From Institution.
ROBERT CAIRD, LL.D., F.R.S.E.
Prof. ARCHIBALD BARR, D.Sc.
A. S. BIGGART.
CHARLES C. LINDSAY.
HENRY A. MAVOR.
EDWARD H. PARKER, *Secretary.*

From Philosophical Society.
J. F. CAMPBELL.
Dr F. FERGUS.
JOHN ROBERTSON.
GILBERT THOMSON.
JOHN MANN, *Treasurer.*

Committee on Papers.

Professor ARCHIBALD BARR, D.Sc.
ROBERT CAIRD, LL.D., F.R.S.E.
ARCHIBALD DENNY.
H. A. MAVOR.

Representatives on the Board of Trade Consultative Committee.

JAMES DENNY.
JOHN DUNCAN.
JAMES HAMILTON.
JAMES WEIR.

Representatives on Lloyd's Technical Committee.

SINCLAIR COUPER.
JAMES GILCHRIST.

JOHN INGLIS, LL.D.
JOHN WARD.

Representative on the Board of Governors of the Glasgow School of Art.

JAMES MOLLISON.

Representative on the Board of Governors of the Glasgow and West of Scotland Technical College.

T. W. M'INTYRE.

Honorary Treasurer—JAMES M. GALE City Chambers John Street.

Secretary and Editor of Transactions—EDWARD H. PARKER, Institution Rooms, 207 Bath Street.

Curator and Sub-Librarian—FRANCIS MARTIN, Institution Rooms, 207 Bath Street.

PRESIDENTS OF THE INSTITUTION

SINCE FOUNDATION IN 1857.

1857-59	WILLIAM JOHN MACQUORN RANKINE, C.E., LL.D., F.R.SS.L. & E., Professor of Civil Engineering and Mechanics, Glasgow University.
1859-61	WALTER MONTGOMERIE NEILSON, Hyde Park Locomotive Works, Glasgow.
1861-63	WILLIAM JOHNSTONE, C.E., Resident Engineer, Glasgow & South-Western Railway, Glasgow.
1863-65	JAMES ROBERT NAPIER, Engineer and Shipbuilder, Glasgow.
1865-67	JAMES GRAY LAWRIE, Engineer and Shipbuilder, Glasgow.
1867-69	JAMES MORRIS GALE, C.E., Engineer, Glasgow Corporation Water Works.
1869-70	WILLIAM JOHN MACQUORN RANKINE, C.E., LL.D., F.R.SS.L. & E., Professor of Civil Engineering and Mechanics, Glasgow University.
1870-72	DAVID ROWAN, Marine Engineer, Glasgow.
1872-74	ROBERT DUNCAN, Shipbuilder, Port-Glasgow.
1874-76	HAZELTON ROBSON ROBSON, Marine Engineer, Glasgow.
1876-78	ROBERT BRUCE BELL, Civil Engineer, Glasgow.
1878-80	ROBERT MANSEL, Shipbuilder, Glasgow.
1880-82	JOHN LENNOX KINCAID JAMIESON, Marine Engineer, Glasgow.
1882-84	JAMES REID, Hyde Park Locomotive Works, Glasgow.
1884-86	JAMES THOMSON, LL.D., F.R.S., Professor of Civil Engineering and Mechanics, Glasgow University.
1886-87	WILLIAM DENNY, Shipbuilder, Dumbarton.
1887-89	ALEXANDER CARNEGIE KIRK, LL.D., Marine Engineer, Glasgow.
1889-91	EBENEZER KEMP, Marine Engineer, Glasgow.
1891-93	ROBERT DUNDAS, C.E., Resident Engineer, Southern Division, Caledonian Railway, Glasgow.
1893-95	JOHN INGLIS, LL.D., Engineer and Shipbuilder, Glasgow.
1895-97	SIR WILLIAM ARROL, LL.D., M.P., Engineer and Bridge Builder, Glasgow.
1897-99	GEORGE RUSSELL, Mechanical Engineer, Motherwell.
1899-01	ROBERT CAIRD, LL.D., F R.S.E., Shipbuilder, Greenock.
Elected Aprl. 23, 1901.	WILLIAM FOULIS, Engineer, Glasgow Corporation Gas Works.

CONTENTS.

PAPERS READ.

PLATES.

PREMIUMS AWARDED

FOR

PAPERS READ DURING SESSION 1899 - 1900.

PREMIUMS OF BOOKS.

1.—To Mr A. B. McDonald, for his paper on "Glasgow Main Drainage."

2.—To Mr David Cowan, for his paper on "Workshop Administration: With special reference to Tracking Work and Promptly Ascertaining Detailed Costs and Profits."

ADVERTISEMENT.

The responsibility of the statements and opinions given in the following Papers and Discussions rests with the individual authors; the Institution, as a body, merely places them on record.

INSTITUTION
OF
ENGINEERS AND SHIPBUILDERS
IN SCOTLAND
(INCORPORATED).

FORTY-FOURTH SESSION—1900-1901.

PRESIDENTIAL ADDRESS.

By Robert Caird, LL.D., F.R.S.E.

Delivered 23rd October, 1900.

Gentlemen—

At the opening of last session I referred to certain measures which the Council had under consideration for the development and extension of this Institution. I shall now, very shortly, indicate the steps the Council and its Committees have taken in furtherance of these schemes, and I shall hope to enlist the sympathy of members in them, so as to secure their assistance in carrying them to a satisfactory conclusion. Before doing so, I should like to refer to the changes in our membership. During the year under review death has been busy among the most prominent of our members in almost every branch of the profession. Some of the most representative Scottish engineers, whose names are associated with various stages of advance in engineering since the start of this Institution, have passed away, leaving gaps in our ranks that cannot be filled, but which serve to recall to our recollection those who, in joining the immortals, have bequeathed to us a great example. Of such are Messrs Gilchrist, Napier, Deas, and Sir Renny Watson. You will see from the Annual Report of the Council, which has been circulated amongst you in anticipation of this meeting, that the nett result of the changes, after taking into account the resignations, deaths, and new admissions, is an increase of thirty-three full members. Considering the unexampled activity in engineering and shipbuilding in Scotland during recent years, these figures are not to my mind at all satisfactory. It is true that within the last five years there has been a very notable increase in our membership; but the rate of two years ago has not been maintained, and it is the business, not only of the Council, but of every member who has the interests of the Institution at heart, to discover the cause of this falling off, to suggest remedies, and to give a helping hand to keep the Institution in complete touch with the engineering profession throughout Scotland. I need scarcely say that the Council will welcome any suggestions made by members, with a view to enhancing the value of the Institution, as a means of disseminating knowledge and of eliciting controversial points for discussion, and also of bringing engineers into closer touch with one another, and so fostering an active professional *esprit de corps.* We of the Council are fully alive to our responsibilities, and we earnestly desire to raise the Institution to a much higher pitch of usefulness and prosperity than it has yet attained. We ask you, gentlemen, for your advice, criticism, support, and assistance. We appeal to you not to be satisfied with passive membership, but to assist the Papers' Committee with your suggestions and contributions, and the Council generally with such hints for their guidance as your experience may dictate. It would be of great assistance if every member would send in to the Secretary the names of duly qualified gentlemen of his acquaintance whom he could recommend for election to our roll in any of its grades. We are apt to forget that there are many men who are deterred by a sense of delicacy from proposing themselves, or, who are perhaps not aware of the conditions of and qualifications for membership, but who, if invited, would be delighted to join us. Let it be our business to seek them out, and to set the advantages which this Institution offers before them. By so doing we shall assuredly not only strengthen ourselves by the activity of our recruiting, but learn the ever-growing wants of our colleagues, which is the first step towards making provision for them. The Council, in pursuance of the scheme to which I alluded last year, has made a selection of gentlemen from among members resident in outlying districts, and has invited them to act as local representatives of the Institution. It is hoped that by means of this organisation we may receive reports as to the special requirements of the different localities which will enable us to make provision for extending the usefulness of the Institution throughout the country generally, and so justify its claim to be a national Institution. It has been suggested that arrangements might be made for holding occasional subsidiary meetings at various centres, such as Edinburgh, Aberdeen, Dundee, etc., and that suggestion will be carefully weighed, and if it receives sufficient support from the members, will be acted upon. It is only by increased membership that we can prudently provide suitable accommodation for ourselves and our library, unless we resort to the expedient, which I am afraid would be an unpopular and a risky one, of raising the annual subscription. It must be apparent to everyone who interests himself in the working of the Institution that the premises are insufficient for our requirements. The old arrangement by which we share the accommodation provided by this building with the Philosophical Society, an arrangement which, when it was entered upon, was an admirable one in the interests of both Societies, has now survived its usefulness. We both need elbow room, and while it is always painful to break up an old partnership, and particularly so in the present case, in which the two Societies have invariably co-operated with mutual forbearance and an ever-increasing cordiality, still the question of a separate and more suitable establishment is becoming urgent, and must shortly be faced by us.

A favourite subject of hostile criticism is the programme of papers read before the Institution. Now, gentlemen, we have a Papers' Committee, and to the uninformed critic it is only natural to lay the blame of an unattractive programme at its door; and that would be quite fair if we, the members of the Committee, wrote the papers instead of merely making a selection from among those presented to us, and I assure you there is no *embarras de richesses*. The Secretary is not inundated with offers of papers, and the Committee would gladly examine and report upon a much larger number. In order to meet the wants of the different divisions of engineering, as we understand them, we have to make a selection of subjects embracing civil, mechanical, marine, and electrical engineering and shipbuilding, say five distinct subjects for ten papers—that is to say, about two papers for each division. From one point of view it ought to be a very easy task to prepare a most valuable and attractive programme so subdivided. There is no doubt that we possess among our members many men of eminence in each of these departments of professional work who could contribute papers that would raise the standard of our Transactions to the level of that of the greatest of kindred Societies. The Papers' Committee was revived in order to assist the Secretary in selecting contributors, and in supporting his invitation to them to read papers. But all this machinery is of no avail unless members who have the leisure, the requisite data, and the power of expression, evince their interest in the Institution by making the sacrifice of time and talent it has a right to expect of them. In a Society such as ours it is inevitable that many of our members should belong to other and more powerful Societies, such as, to instance only one or two, the Institutions of Civil Engineers and of Naval Architects, and we find that the Transactions of these Societies are frequently enriched by very valuable contributions made by members of our own Institution. I do not for a moment grudge our great English contemporaries the powerful stimulus and aid they draw from Scotland. I am proud of the large share we take in the excellent work they are doing. At the same time I would appeal to gentlemen who have joined several Societies of similar purpose, and who reserve their best efforts for the larger audiences of the South, to show an equal interest in and an equal consideration for the Home Institution. It would be unfair were I not to acknowledge the generous assistance we have received from our friends across the border, both in the matter of papers, and of the part they have taken, verbally and by correspondence, in our discussions. This interchange is admittedly of great value to all of us. We feel, however, that we must not draw too fully upon such generous aid. As an Institution we must depend for our advancement on our own intellectual resources, using the kindly proferred help of rival bodies rather as an occasional stimulus and encouragement than as a standing source of supply. We have here in Scotland an ample field. The chief centres are hives of engineering industry which have always been in the forefront of mechanical progress, and which owe that position to the natural ingenuity and conscientious training of leaders and of their subordinates down to the rank and file. The problems which daily present themselves in such pursuits are very naturally of the most vital importance and interest, not only to those directly and immediately concerned with the special cases in which they occur, but to the whole profession, and the manner of their attempted solution and the countless expedients to which such attempts give rise, form a very mine of practically exhaustless matter for presentation to the consideration, criticism, and discussion of members of this Institution. A reference to papers read within the last few years, dealing with the leading features in the progress of marine engineering and shipbuilding during the century—or more properly the half century—shows conclusively that the district of the Clyde, more than any other, has been the cradle of almost every development, as well as the workshop which has turned these developments to the use of mankind. The various stages are in many cases marked as they were reached in the pages of our Transactions, and yet one cannot help feeling, in turning over these pages to collect data for a historical retrospect, how meagre are the statements, how imperfect the discussions, in comparison with the importance and epoch-making character of the results achieved in practice. I have no intention of attempting to summarise the advances made in engineering science; very valuable reviews have been made recently, notably by Sir William White, in his Presidential Address to the Mechanical Section of the British Association in 1899, and by Sir John Durston and Mr Milton in 1897. Two of these gentlemen are honorary members of this Institution, and we may therefore, in a measure, claim their contributions as emanating from our midst. In any case, it would be supererogatory, after their treatment of the subject, to attempt to recapitulate the successive steps in the history of engineering science. A good occasion will present itself for such retrospect when our Jubilee as an Institution comes round seven years hence. I may, however, be permitted briefly to indicate a few of the changes these gentlemen have called attention to with a view to ascertaining the direction in which further progress may be looked for. Perhaps the most striking advance has been in the gradual rise of steam pressures, accompanied as it necessarily has been by the adoption first of the compound and then of the triple-expansion and quadruple-expansion engine. The rise has been from 20 lbs. per square inch to 180 and even 250 lbs., with the result that engines and boilers are working as satisfactorily at these higher pressures, and at least twice as economically, as at the lower. Other accompaniments of increased pressure have been successive improvements in materials of construction and in design; piston speed has been doubled and the speed of revolution increased eight-fold. The type of boiler has changed from the tank to the circular or Scotch, which has held its own with a persistency worthy of the name, although it has nearly reached its limit of efficiency, and, at any rate in the Navy, has given place to the water-tube type, which requires only about one-tenth the weight of water carried in the cylindrical boiler for the same power. A reduction of as much as one-half in weight of engines has been effected by improved design following upon a correct determination of stresses, by the use of stronger material, such as mild steel for iron, and gun metal for cast-iron in condensers, etc., and further by the great development in machine and other tools. Corrugated furnaces in boilers, evaporators, and distillers, metallic packing and asbestos packed cocks, have evolved themselves as the need for them arose. An important feature in engine design has been the separation of many organic parts, such as pumps, from the main driving engines, and the multiplication of the applications of power. Within fifty years in the Navy, auxiliary engines have increased from eight in number, of 146 H.P., to about three hundred of 3000 H.P., in a single ship. It is interesting to note how clearly Scott Russell foretold the lines of development in his words spoken in 1865, "I myself continue to hope that the engines of the future are to be high pressure expansive engines working with surface condensers and fresh water in their boilers."

In naval architecture a very marked feature has been the growth in the dimensions and weight of ships. On the ocean ferry the speed has increased in sixty years from 8½ to 22½ knots, and the time occupied is now about one-third of what it was at the beginning of the term. Ships have in the interval been trebled in length, doubled in breadth, and increased tenfold in displacement. The engine power is forty times as great, and the ratio of horse power to weight driven is fourfold, while the rate of coal consumption is only about one-third. Sir William White gave a very striking instance of the advantages of increased dimensions in a comparison of two cruisers, showing that, at a constant speed of 20 knots, displacement could be increased eightfold for an augmentation of horse power of 2½ times. On the same authority we have it that in an Atlantic liner of 20 knots average speed, about 1000 tons could be saved by the use of nickel steel instead of mild steel, a saving which would suffice to raise the average speed more than a knot without altering the dimensions. Such figures as these are full of suggestiveness, and open up a wide and fruitful field of speculation. But perhaps the achievements of Mr Parsons in the introduction of his turbo-motor, as tested in those phenomenally swift vessels the "Turbinia" and "Viper," mark the most decisive innovation in engineering science of modern times. You will, I am sure, be glad to learn that Mr Parsons has consented to read a paper before this Institution, at our January meeting, on the application of his system to steamers of the mercantile marine, and members will doubtless be glad to have the opportunity of discussing the question in all its bearings, and of giving the distinguished inventor the benefit of their experience and of their benevolent criticism.

Gentlemen, in making this rapid and superficial survey, I have digressed from the line I set before myself in this address, and I have done so in order to meet an objection we sometimes have made to us when we ask a member for a paper—the objection that he has nothing to say. You have all something useful to say, drawn from personal experience in the ever-changing conditions of daily practice, and I should like to repeat what has been urged by some of my predecessors, that a lengthy or exhaustive paper is not always necessary; a short one will often lead to an interesting and instructive discussion.

The function of discussion in the elucidation of scientific truth is not perhaps fully appreciated. I am inclined to think that its value is largely overlaid and concealed in the usurpation of its province by technical and scientific journals with their anonymously authoritative treatment of every conceivable subject in such abundance that, the appetite, jaded and atrophied by a perpetual satiety, loses all zest. We are constantly in the throes of a laboured digestion of incongruous and inchoate material. The correction lies in a return to the simpler and more direct methods of verbal discussion, in which each disputant presents the results of his own study and experience, and tests the accuracy and completeness of his observation, and the fairness of his deductions, by submitting them to the criticism of his colleagues.

I have no intention of decrying deliberate statement. There is ample scope for it in the original paper forming the subject of discussion, in the correspondence, and subsequently in the deferred reply on the discussion, the whole being fully reported in the Transactions. But there is a healthy stimulus and a suggestiveness in a robust, lively, face-to-face discussion that are lacking in a carefully prepared written statement. And there is another advantage in it that cannot be too strongly emphasised, and that is its direct effect in making members acquainted with one another. That is an important function of such an Institution as ours, and one that has perhaps, until recently, received less attention than it deserves. We have endeavoured, by means of visits to other centres of industry, and excursions locally, to promote this feeling of fellowship, and we are now about to bring members and their friends together in a conversazione, following thus the example of some of the greater English Societies, in which this form of entertainment is a very successful feature of their corporate life. My predecessor, Mr Russell, whose memory, where the history of the Institution is concerned, is never at fault, reminds me that many years ago we held similar social meetings, which were very successful, and I hope members will show by a full attendance that our efforts to foster social relations between them by this revival are appreciated.

This leads me to the consideration of another undertaking of ours, to which I referred last year, namely, the International Engineering Congress (Glasgow), 1901. I should like to explain briefly what the Committee appointed by the Council has done up till now, and to lay before you the present state of our organisation. The Committee consists of Messrs Barr, Biggart, Mavor, M'Intosh, and myself. We were appointed rather more than a year ago, and immediately set about studying the question of the best form, in view of all the circumstances, to give to the Congress. We visited London, and attended several conversazioni and summer meetings, notably those of the Institutions of Civil and Mechanical Engineers, and consulted many of the leaders in such movements. We found that the idea of a Congress in Glasgow during the Exhibition year was in almost every instance very favourably entertained, and we received many very valuable hints as to what our preliminary procedure should be, and whom we should approach with invitations to support us. We found that it was of vital importance to secure at all events the moral support of the Institution of Civil Engineers, from its position as the *doyen* of engineering societies, and from its somewhat peculiar position as a sort of synthesis of the leading members of almost all the other societies. We felt that if the Council of this Institution approved of our scheme, and interested themselves either corporately or individually in it, its success was practically assured. I have much pleasure in saying—I do so with the utmost gratitude—that they never left us for a moment in doubt as to their attitude. You will readily understand that societies are largely circumscribed in their action by precedent, and perhaps, I should say, by general lines of policy. The Civil Engineers do not hold summer meetings throughout the country, but, instead, they have a biennial conference in London. Our invitation to them to take charge of the Department of Civil Engineering as a sort of summer meeting of the Institution could not, therefore, be accepted in its simplest form, and we could not but appreciate the force of the further objection that a restriction of the Institution in its corporate capacity to one or two sections only (whereas by its charter primarily, and perhaps still more by its authority and activity, it claims to extend its protection and assistance to all) was inadmissible. However, Sir William Preece, the then President, in opening the Conference of 1899, made an appreciative reference to our Congress, commending it to the members. The Council of the Institution of Civil Engineers accepted our invitation to its President, who should then be in office, to act as President of the Congress; and Sir Douglas Fox, who is now President, but who demits office shortly, has consented to act as Chairman of our London Committee. The practical interest that Institution has evinced in other directions will appear in the further course of this statement, but I think it better, before referring to it, and for the sake of clearness, to explain some of the details of the organisation of the Congress so far as it has gone.

As I intimated to you last year, Lord Kelvin is the Honorary President; the President will be the President then in office of the Institution of Civil Engineers; the Chairman of the London Committee, Sir Douglas Fox; and the Chairman of the Local Committee, myself. The Vice-Presidents will be appointed in consultation with the leading societies taking charge of sections; and I may mention that the Lord Provost of Glasgow has consented to be enrolled as an honorary Vice-President. There will also be a General Committee, and invitations have already been issued to leading societies at home and in America to nominate members. The London Committee has been formed chiefly of Presidents, Past-Presidents, and Vice-Presidents of the principal engineering societies in London and the provinces, with Dr Tudsbery as Secretary, and its duties are mainly advisory. The members will be *ex officio* members of the General Committee, and I may remark incidentally that it has already held one well and representatively attended meeting of a character most encouraging for the future prospects of our undertaking. Another meeting will, we hope, be held very shortly in order to discuss questions, more or less of detail, that have been raised by the various Institutions interested, and which it is necessary to have settled by mutual agreement.

It has been decided to arrange the work of the Congress in nine sections, each representing a distinct department of engineering, and the demarcation has been finally settled in full consultation with eminent authorities and with the approval of the London Committee. I hope, gentlemen, it will also commend itself to you. Each section will have a Chairman and a Secretary appointed by the Society in charge of it, and they will make all arrangements in connection with the reading of papers, the discussions, and the general business of the section, with the assistance of the general and local Committees. The ruling idea has been to leave the Institutions in charge of sections as free in the conduct of the business as if they were holding independent summer meetings, merely grouping them together in a kind of federation cemented by a series of receptions and entertainments In this way the several societies may have independent social gatherings and banquets, with a rare opportunity for interchange of hospitalities. Each section will of course be at liberty to publish the papers read in its own Transactions. It is not intended to publish bulky Transactions in connection with the Congress, but rather short abstracts, with perhaps an occasional paper *in extenso*, but that is a matter of detail for future consideration. I would, however, point out that, with the wide publicity given so promptly on such occasions to papers and discussions of professional interest by the press and in periodicals, a full report of proceedings embodied in permanent form is rendered unnecessary.

The nine sections referred to are as follow:—

I. Railways.
II. Waterways and Maritime Works.
III. Mechanical Engineering.
IV. Naval Architecture and Marine Engineering.
V. Iron and Steel.
VI. Mining Engineering.
VII. Municipal Engineering.
VIII. Gas Engineering.
IX. Electrical Engineering.

Now, in the selection of the Societies to preside over these sections, it was necessary to exercise care that full consideration was given to the validity of their claims to represent the profession each in its department, so as to avoid wounding the susceptibilities of rival bodies. Fortunately for us, the greater Institutions stand out so prominently beyond any reach of rivalry or competitive claims, and they and kindred bodies work together so harmoniously, that we have had little difficulty which we could attribute to jealousy. Perhaps the example we set in subordinating our own claims to posts of prominence may demand a word of explanation here. I have been asked why we, as the Institution which is promoting the Congress, have not arranged for a foremost place in the organisation for our President. I can only answer that that question has had the fullest consideration, and I am sure you will concur in the decision to which the Committee came after mature deliberation, namely, that we, as hosts, should give the places of highest honour to our guests, remembering that our dignity is amply safeguarded in that the Honorary President of the Congress is an Honorary Member of our Institution. It rests with us to nominate the President of this Institution as one of the Vice-Presidents of the Congress if we so desire, and that, I have no doubt, you will leave in the hands of the Council. Some of you may think that this Institution should have assumed the charge of one of the sections. I think, however, when you have heard my statement, and look over the list of sections with a view to selecting the one most suitable for us, you will perceive that the difficulties would have been insurmountable. Had we selected any one of the sections for our own occupation, our selection would have meant the exclusion of the leading society dealing with the particular department of engineering concerned, and that in an invidious manner, because the principle of selection adopted in the case of all the other sections would have been in this case deliberately violated. What we *did* do was to hold ourselves in reserve, so as to take up the work of any section which should, for any reason, not have been undertaken by the society originally invited. Happily, I think, for the successful prosecution of our scheme, all risk of any such vacancy is, humanly speaking, averted. While we have not in every case received the final official acceptance by the Institutions of our invitation, all the difficulties and objections that arose in the course of negotiation —and it was inevitable that such should arise—have been discussed, met, and practically settled. Should, however, this anticipation unexpectedly prove to be too optimistic, I can only repeat that this Institution is ready to step into the breach and ensure the carrying out of our programme in its entirety.

To proceed to the consideration of the arrangements for the work of the several sections, I have to report that Section I., Railways, will be under the chairmanship of Sir Benjamin Baker, a past President of the Institution of Civil Engineers. The Secretary is Mr R. Elliot Cooper. Of Section II., Sir John Wolfe Barry, also a past President of the Institution of Civil Engineers, has accepted the chairmanship, and Mr L. F. Vernon Harcourt the secretaryship. Gentlemen, these are the two sections which we looked upon as pertaining specially to civil engineering in its restricted sense, and these are the two of which we should, but for the great catholicity of its sphere, have expected the Institution of Civil Engineers to undertake the organisation and working. If that expectation has not been fulfilled, we feel that the Institution has done, if possible, even more for us than if it had been fulfilled, and has not allowed the formal objections which I have already explained to stand in the way of a cordial and thorough if nominally unofficial support. It would not be possible to find men of greater eminence or of greater authority in their respective spheres to preside over two of the most important departments of the Congress. Mr Vernon-Harcourt has already completed his programme of papers for the meetings of his section, and it will shortly be issued. It is essentially an international one, and contains important papers by eminen engineers in various countries of Europe and America. In the case of Section III., Mechanical, negotiations are still proceeding with the Institution of Mechanical Engineers. It must be borne in mind that most, if not all, of the Societies with which we have been communicating are practically in vacation during the summer months, and when work is resumed in autumn there is naturally an accumulation of business to be dealt with, so that it is scarcely possible to get a decision on a matter so important as this of ours as promptly as we could wish. The Mechanical Engineers hold summer or autumn meetings annually in various industrial centres away from London. They have been to Glasgow on several cccasions, and a possible objection to a visit next year is that it would be out of the usual turn. They have asked for information on a variety of points, among others that of the capabilities of

Glasgow from the point of view of accommodation under the exceptional circumstances of an Exhibition year. We have replied very fully to all their enquiries, and we hope satisfactorily. On Friday last Dr Barr and myself, accompanied by Mr Cormack, our Secretary, had a meeting with the Council under the Presidency of Sir William White, as a result of which we hope to have an acceptance of our invitation very shortly.

For the Section of Naval Architecture and Marine Engineering we, of course, turned at once to the Institution of Naval Architects, which is deservedly one of the very first engineering societies in the world, from the double point of view of the value of its contributions to science, and of the high professional character and widespread influence of its membership. Our invitation to take charge of this section met with a cordial response, coupled, however, with one of those awkward conditions which, while it is imposed by the convenience of one side, is an almost fatal hindrance to the other. That condition was that the Naval Architects should be free to fix the date of their meetings, the date named by us being unsuitable. The difficulty appeared to be insuperable, because we knew, of course, that the condition would not have been insisted on had it not been a vitally important one to our friends, and on our part we could devise no practicable method whereby we could hold full meetings of the Congress on more than one date. Our Committee had an interview with the members of Council of the Naval Architects resident in this district, at which a *modus vivendi* was arrived at, and it is now, after having been submitted to the Council of the Naval Architects, in process of adjustment. I have every hope that the final arrangement will be made in the course of this week. A failure to come to terms with this powerful Institution would have been almost fatal to the success of this Section, because, as you are doubtless aware, they had already arranged, on the invitation of the Corporation of Glasgow, to hold their summer meeting here. I think it right to say that, throughout the negotiations, difficult as they undoubtedly were, the representatives of the Naval Architects have always manifested the liveliest interest in our Congress and the sincerest desire to assist us.

Sections V. to VIII. inclusive have been placed in charge of the Iron and Steel Institute, the Institution of Mining Engineers, the Incorporated Association of Municipal and County Engineers, and the Institution of Gas Engineers. These societies have all accepted our invitation to take charge of the respective sections representing their special spheres. We have just received the formal consent of the Institution of Electrical Engineers to take charge of Section IX. Gentlemen, it is always unsatisfactory to report upon negotiations which are still pending. One cannot predict the result with absolute certainty, nor can one without indiscretion express one's own conviction or the grounds upon which it is based. I should not to-night have reviewed in such detail the course of our negotiations with the various societies, were it not that I feel you are warranted in expecting the fullest possible information from me on this my last opportunity of delivering a presidential address from this chair. I have endeavoured to set the position fairly before you, suppressing nothing, so far as I am aware, that is vital, and if I have perhaps divulged more than my colleagues may think entirely prudent, my excuse must be my desire to take you completely into our confidence. We have had from the Lord Provost an intimation of the intention of the Corporation of the City of Glasgow to receive and entertain the members of the Congress. While such an honour and such hospitality are only what might have been expected from the traditions of the city, we are none the less grateful, and appreciate highly the spontaneous and graceful manner in which the offer has been made. We have also to express our gratitude to the Court of the University for placing the University buildings at our disposal for the meetings of the sections and of the Congress as a whole. Such surroundings will add greatly to the dignity and interest of our proceedings, and will be no small factor in the success of the Congress.

On the subject of finance I should like to say that our Guarantee Fund amounts to about £3300. From many of our members to whom we sent circulars we have had no reply, and we propose to make a fresh appeal, to which I am confident we shall have a satisfactory response. Members must realise that the Congress as organised will be one of the most important that has ever been held in this country. By it we as an Institution will be brought into close contact, on terms of fellowship, with all the great engineering associations of the world, with the effect, if we rise adequately to the occasion, of improving our corporate status and of enhancing the consideration in which we are already held in virtue of the invaluable work in the advancement of science embodied in our records, and of the names pre-eminent in the profession which have adorned the long and glorious roll of our membership.

VOTE OF THANKS.

Mr John Inglis, LL.D. (Past-President) proposed a hearty vote of thanks to the President for the eloquent and interesting address with which he had favoured the Institution that evening. He (Mr Inglis) had heard of the difficulties of making a Budget speech interesting, but he thought the difficulty of conducting the whole of the negotiations with all the different societies in connection with the forthcoming Congress was much greater than the difficulty of handling the figures that were dealt with by the Chancellor of the Exchequer, and the President had treated the subject with his accustomed grace and elegance.

The proposal was adopted by acclamation.

A NEW GAS PRODUCER.

By John A. Purves, D.Sc., F.R.S.E. (Member).

(see plate i.)

Read 23rd October, 1900.

It is not my intention in this paper to deal with the general question of gas producers; what I wish to bring before the Institution is a new portable gas producer; but, in order to clearly understand its operation and the advantages it possesses, it is necessary to say a few preliminary words upon the production of combustible gas.

There are, broadly speaking, two sources from which gas for commercial purposes is obtained, to wit, coal and petroleum. Of the former it is unnecessary for me to speak, as the gas which I wish to consider belongs to the latter class.

The attention of travellers having been called to the production of a natural gas in petroleum-bearing districts, as at Baku and elsewhere, it was not long before efforts were made to imitate the workings of nature in attempts to produce from the petroleum of commerce a combustible gas.

Two well-marked and distinct methods of producing gas from petroleum exist, which give rise to what are known as "oil gas" and "air gas."

Oil gas, as it is popularly called, is produced by heating the petroleum in a retort until the whole is converted into a permanent gas. The illuminating power of such gas depends upon the temperature of the retort, more gas being obtained when the retort is highly heated, although the illuminating power is thereby decreased.

The earliest oil gas producer made in England was Taylor's, in 1815, wherein the gas was generated by passing the oil through highly heated pipes. The best known oil gas apparatus of the present day is probably that of Pintsch, the gas being extensively used for trains, buoys, lighthouses, etc. Mention may also be made of the apparatus of Keith, Thwaite, Young, and Bell. As, however, the apparatus that I intend to describe belongs to the "air gas" type, I am unwilling to occupy further time upon the oil gas producers, although their study is one of great interest.

Air gas consists of a mixture of air and vapour of petroleum or liquid hydrocarbon, such as gasoline, petroleum spirit, or pentane. The proportion of such vapour which ordinary air is able to take up varies with the temperature and with the degree of volatility of the petroleum. Thus 100 volumes of air will retain 5·7 per cent. (by volume) of gasoline at 14 degrees Fah., 10·7 per cent. at 32 degrees, 17·5 per cent. at 50 degrees, and 27 per cent. at 68 degrees, the gasoline having a specific gravity of 0·65. From the results of careful experiments, it is shown that air charged with 735 grains of gasoline vapour per cubic foot has an illuminating power of 16·5 candles when consumed at the rate of 3½ cubic feet per hour in an ordinary argand burner.

The manufacture of gas, or the carburetting of ordinary air by forcing a current over liquid petroleum, seems to have been proposed first by Lowe, in 1831, who in that year patented his apparatus. From that date onwards there has been a continuous stream of inventions for the production of gas from the lighter petroleums. These inventions, I would again point out, should not be confounded with oil gas apparatus, which operate by vapourising the heavier petroleums by heat for the production of combustible gas.

Air gas producers may be roughly classified as follows:—

(1) Apparatus in which air is *forced under pressure* either through or over liquid petroleum. To this class belong the inventions of Jackson, Müller, Weston, and Maxim.

(2) Apparatus in which, on account of the danger of using large quantities of liquid petroleum, an absorbent is employed to take up the hydrocarbon either in part or entirely, the air being, as in the first case, *forced under pressure* over or through the absorbent.

Considerable commercial importance attaches to certain of the apparatus mentioned under these two classes, both the "Alpha" apparatus of Müller and the "Sun" apparatus of Hearson having had considerable success, here as well as in America, for the lighting of country houses, etc. It will be easily seen that the necessity of having some *motive power* to actuate the current of air introduces complex mechanism which militates against the general adoption of such apparatus. This disadvantage has, however, been met by the apparatus comprising the third and last class of aero-gas generators, to the description of which the remainder of this paper is devoted. Apparatus of this class possess a peculiar interest on account of their simplicity and efficiency, and their introduction bids fair to effect a revolution in lighting, heating, and motive power industries.

(3) In 1895 Mr Naum Notkin, of Moscow, was struck with the idea that use might be made of the physical property that carburetted air is considerably heavier than ordinary atmospheric air, for the construction of a gas-producing apparatus of extreme simplicity. His method and apparatus may be described as follows:—

The apparatus, to which the name aero-gas fountain has been given, consists essentially of a vessel of tin or other material, with an orifice at the top and another at the bottom, filled with a porous material which is impregnated from time to time with one of the lighter hydrocarbons. The action of the apparatus is that ordinary atmospheric air enters at the upper orifice, and taking up a certain proportion of hydrocarbon vapour becomes heavier and *gravitates* through the mass of absorbent, taking up more and more of the hydrocarbon vapour, until it finally issues from the lower orifice in the form of a gas capable of being used for lighting, heating, and all other purposes to which ordinary gas is put. Not only does the gaseous mixture become heavier, but it becomes cooler by the rapid volatilization of the petroleum, and this cooling action, which is of advantage on account of the greater safety that it affords, is greater the more rapid the passsage of air through the receptacle. As, however, the oil in this apparatus is practically in a solid state, there is no danger either of fire, from the presence of liquid petroleum, or of explosion; indeed, the experiment has been tried of forcing the flame backwards through the carburetter, with the result that a light applied at the upper orifice immediately went out on removal of the pressure.

As the greater specific gravity of the gaseous mixture is depended upon to produce the necessary flow to the burners, it will be seen that the carburetter must always be at a higher level so as to have a "head" of gas, and that the greater the difference of level the greater will be the pressure of the gas. The absence of any pressure beyond that due to the "head" renders it necessary to have all the gas ways of ample size so as to prevent any throttling.

Fig. 1 shows a carburetter (or aero-gas fountain) for lighting and heating purposes. It consists of a reservoir of ordinary tin, with an air admission regulator at the top and a bent "draw-off" pipe at the bottom, the pipe being so designed as to siphon out the gas and prevent the possible overflow of any liquid petroleum that might be left on the bottom from an overcharge. The carburetter is divided horizontally by two perforated shelves, the object of which is to produce a longer travel of the gas and to distribute it through the perforations.

The absorbent is a species of wood pulp which is entirely unaffected by the petroleum, and acts merely as a means of holding it in suspension.

Fig. 2 illustrates the application of carburetters to table and other lamps. The burners used are argands, with steatite centre and very wide gas ways. The light is of high illuminating power and of remarkable purity.

A great advantage of this light is that the constant cleaning and trimming of wicks, so troublesome with the ordinary paraffin lamp, is entirely done away with, and no attention is necessary beyond the refilling of the carburetter when it becomes empty.

In Fig. 3 the carburetter forms part of the street lamp, which has a hinged top, so that when the carburetter is exhausted it can be lifted out and a fresh one put in its place.

The advantages of such lamps for street lighting in country places, way-side railway stations and the like, where coal gas or electricity cannot be had without a special installation at great cost, are obviously very great, as the lamps can be constructed to burn for a week or more without recharging the carburetter.

Fig. 4 illustrates a ship's light, and here, as well as in railway and other signal lights, the system offers peculiar advantages.

With respect to heating, all classes of stoves can be adapted for this system, and in country places this will be found of great importance. Fig. 5 shows the application of the fountains to some well-known stoves and heaters.

The advantages of gas as an illuminant were early apparent to lighthouse authorities, and in the Government inquiry into the relative advantages of paraffin, gas, and electricity as sources of light for lighthouse illumination, the superiority of gas was clearly demonstrated; but, owing to the necessity for elaborate plant being installed in the vicinity of each lighthouse to be lit by gas, it was pointed out that despite its intrinsic advantages it could not be recommended on account of the expense and difficulty entailed in its production. Since those days, however, the Pintsch system of vapourising oil gas, despite its costliness both as regards the gas produced and the plant required, has been largely made use of by the lighthouse services both at home and abroad.

The simple automatic carburetters that have just been described place within reach of the Lighthouse authorities the possibility of making use of gas lights instead of the paraffin lamps now in common use. In place of the oil tanks required for the storing of the paraffin, the tin carburetters will be served out to the various stations ready charged, and they will be returned when exhausted and fresh ones supplied.

Having touched upon some of the uses to which the aero-gas fountain may be applied in lighting and heating, it may now be well to examine shortly the relative efficiency and cost of this gas as compared with others.

When using an ordinary argand burner I find that a gallon of petroleum will yield, from one of the aero-gas fountains, from 700 to 1000 candle power hours, depending upon the quality of the petroleum used. In comparing it with ordinary coal gas giving 2800 candle power hours per 1000 cubic feet, the gas produced from the fountain works out as equivalent to the above coal gas at 3s 4d per 1000 cubic feet, when petroleum is 1s per gallon. The cost of the light varies directly with the price of the petroleum. The gas can of course be used more economically in the regenerative burners of Wenham, Siemens, and others, than in an argand burner, and used with an incandescent mantle its efficiency is still more enhanced.

The aero-gas fountain can also be used to produce gas for stationary engines of the explosive type, for motor cars and for launches, and it is clear that all the advantages of the gas engine can now be retained along with the independence of the oil engine.

At the present time extensive trials are being made with these fountains, chiefly for motor-car work, with such satisfactory results that one seems justified in prophesying that these simple gas producers will be the solution of the difficulties now hindering the rapid growth of automobilism.

Discussion.

The discussion on this paper took place on 20th November, 1900.

Mr T. Blackwood Murray (Member) noticed that at the conclusion of the paper Dr Purves mentioned the application of his apparatus (the aero-gas fountain) to motor cars, and had pointed

Mr T. Blackwood Murray.

out its special suitability for that class of work. It appeared to him on the surface that the only novel feature about it was the fact that it worked by gravity, and hence did not require any propelling fan to blow or force the air through the gasoline. This property was, however, of little or no value where motor cars or gas engines were concerned, as there the suction of the engine caused by the forward stroke of the piston gave an ample flow of air to effect the carburation. Somewhat similar carburetters had been tried and abandoned for a number of reasons. Among these might be mentioned the difficulty of obtaining a proper mixture; the varying temperature and humidity of the atmosphere influenced the quality of the mixture, and consequently in a car the mixing valves required continual adjusting to ensure anything like a good explosive mixture. It was only an expert who could expect to get good results. Again, in such carburetters the lighter hydro-carbons were evaporated first, leaving behind a residue which in some cases was so heavy and difficult of volatilisation that one could scarcely get a proper explosive mixture with cold, damp air. It seemed to him that a spray carburetter was very much more suitable, as it was governed by purely mechanical considerations, and, as a matter of practice, a sufficiently constant mixture could be obtained under all conditions—winter and summer, wet or dry—to give a good explosive mixture. He would like to ask Dr Purves how he fed the petrol to the carburetter? He required about four gallons for a 100 miles' run, and roughly speaking, it seemed to him that a carburetter containing this amount of petrol, and the necessary absorption material to carry it in suspension, would be a very cumbrous apparatus. Perhaps Dr Purves could give the total weight for a carburetter capable of containing four gallons of petrol.

Mr F. J. Rowan (Member) said that, as he had been closely associated with the working out of the apparatus described by Dr Purves, he would make a few remarks. It might be well to point out that, although this was a comparatively new apparatus, the importance of it was well assured. This would be understood

Mr F. J. Rowan.

when he said that for a kindred appliance in France there were at present four large companies of considerable extent in active existence, and the result of the first fifteen months' working of the original company showed something like 150 per cent. on the capital. They might, therefore, imagine that this appliance was not a mere toy, but one that was capable of very large business. The convenience of the apparatus, from the absence of all machinery, as far as regarded lighting, had been mentioned by Mr Galbraith, and there was no question that all who had to do with apparatus for producing carburetted air by means of fans driving air through liquid gasoline had found out the drawbacks to such machinery. Hence an improvement which did away with anything of that sort, and with all complications, must be very convenient. As to the cost of the gas, he had been told by a friend, who had considerable experience with oil gas, that gas of the nature of Pintsch's oil gas cost something like 10s per thousand cubic feet, and therefore there was a large field for a simple apparatus for lighting in places or districts where a cheap supply of gas, such as they had in Glasgow, could not be obtained. In the case of this Notkin apparatus, there were no waste products to annoy people as in the case of acetylene and similar gas producers. Moreover, there was no troublesome generating of the gas to be attended to. The only operation required was what was pointed out by Dr Purves—the re-filling of the fountains—and that could be easily arranged on a large scale by having them sent out from central depôts, so that private consumers need not trouble with that. In Mr Galbraith's communication (see page 32) there were some remarks which really turned on the question of specific gravity. He had only recently discovered the difference of specific gravity between gasoline vapour and air, and when he said that gasoline vapour was from three to four times the weight of air, it would be perceived that any slight variation of barometric pressure could not affect it very much. In the production of the gas, it was questionable if there was an admixture of air and vapour to any appreciable extent. In fact, his own impression

Mr F. J. Rowan.

was that the office of the air was to act somewhat after the fashion of a piston, to force the gasoline vapour down through the pipes, or rather to occupy the space which was left void in the gas fountain by the falling of the vapour. The great specific gravity of the vapour disposed also of questions that were raised about supplying houses or buildings of considerable size by means of a main system. This plan had been successfully carried out in France in the case of buildings such as barracks and houses for the poor, a battery of gas fountains having been placed in the buildings near the roof. In the case of coal gas, the pressure in the pipes varied to a slight extent as one ascended in the house; it was rather better the higher one went. But in this case it was exactly the opposite, so that there was no difficulty at all in supplying a large building from one central reservoir placed near the roof. The only precaution needed to be taken was to vary the size of the pipe as one descended, because the pressure, increasing with the "head," required a smaller pipe in the lower part of the building to insure the supply being constant. The gas, in fact, might be treated as being more similar to water than the ordinary coal gas in some of its actions.

Mr NORMAN D. MACDONALD (Visitor) remarked that he did not pretend to be a scientific man himself, although he had a scientific turn of mind. His attention had been first drawn to this apparatus by its extraordinary and, he thought, misleading simplicity. He considered it was quite impossible that a mere tin box which contained only an absorbent material and some petrol could give such light and power, and he really thought at first that the thing could be of no possible value; but he soon saw that there was a great deal in the apparatus and he took special trouble to test it, particularly with respect to its application to auto-cars—a subject in which he was specially interested. In such cars it was desirable to get rid of the difficulties and dangers of carrying liquid petrol, and also of the very delicate apparatus of the carburetter. In the application of this new gas producer the only difficulty at first was the matter of good regulation so as to get a mixture of air and gas suited for the varying states of the atmosphere and temperature, and also for the ever changing conditions of the work —heavy work, uphill work, and work on the level or down hill. Motor cars were very tricky and they required careful handling to get the best work out of them, and a good driver could obtain a greater speed by managing his mixture correctly. As a result of trials by skilled men, a regulator had been obtained which enabled the density of the gas to be most delicately adjusted. With regard to the possible difficulty of the apparatus working in bad weather, Mr John Macdonald had driven from London to York, a distance of 200 miles, without any delay or accident, with his car fitted with a Notkin generator, and had not the slightest difficulty in spite of a tremendous storm of hail, rain, and wind all the way—the weather being the worst that he had ever experienced. The machine behaved beautifully the whole time. He considered from what experts and well-known auto-car owners in London, etc., had told him, that there was a great future before this invention.

Mr William Foulis (Member) observed that the method of producing gas by forcing air through a volatile spirit was very old, and a great many machines had been made on this principle, and worked with very considerable success. The apparatus described in the paper was upon a different principle, and, he thought, showed a great deal of ingenuity. One point that had struck him in reading the paper was the difficulty of understanding how it could be called an aero-gas apparatus, because it seemed to him that it would be very difficult indeed to get the air to combine with the gas. It was well known that gases even of small difference in specific gravity were very difficult to combine, unless they were thoroughly stirred up and mixed together. There could be no such action there, and he thought with Mr Rowan that the action of the air simply acted as a piston, and pressed the vapour down through the pipes. He could scarcely believe that the vapour which was burning in the lamp on the table was mixed with air. At all events, if that were so, one would like to know what the proportion of air was, and whether that proportion was constant.

Mr William Foulis.

That was a matter which could be determined without much difficulty, and he thought it would be well worth doing. He would like to know what quality of petroleum was used, and if there was any residue left, or whether the whole of it wall vaporised. That was a point of considerable importance. In as the petroleums the lighter portions of the oil evaporated first. Did the same action take place here? The apparatus, for a great many purposes, seemed to him to be exceedingly useful. The only drawback to it was that the supply of oil must be placed above the light, and that would make it exceedingly difficult to control where it was attempted to light more than one light, or lights at different levels. The usefulness of this gas for motor purposes would depend very much upon whether it was really mixed with air, or whether it was simply the vapour of the petroleum. If mixed with air, with the temperature varying from time to time, it would be exceedingly difficult to maintain a constant equal explosive mixture in the cylinder of the engine. These were points which had occurred to him, upon which Dr Purves might offer some further information.

Professor W. H. Watkinson (Member) said he would like to know the density of the oil which Dr Purves used. He had tried similar experiments with oils of different densities, and had found that only when using gasoline or benzoline would the apparatus work. When using Scotch paraffin it was impossible; at any rate he had been unable to get a flame. If Dr Purves would mention the maximum density of the oil which might be used, he thought it would add materially to the value of his very interesting paper.

Mr Alexander Wilson (Member) said, in putting a value on the gas from this gas producer, Dr Purves stated that "In comparing it with ordinary coal gas giving 2800 candle power hours per 1000 cubic feet, the gas produced from the fountain works out as equivalent to the above coal gas at 3s 4d per 1000 cubic feet." Now, the paper having been read in Glasgow, one naturally expected that that would be the value of Glasgow gas. On looking into the matter he found that in 20 candle power gas the value was about 4000 candle power hours per 1000 cubic feet, which materially altered the equation. The gas Dr Purves introduced into his comparison was of 14 candle power, while the gas in Glasgow was about 20 candle power. He thought the corresponding value should have been given at 4s 9d per 1000 cubic feet instead of 3s 4d, that being more like the value of gas in Glasgow to the gas produced from the gas producer. The oil used by Dr Purves, which had a specific gravity of ·65, cost 1s per gallon, and gave from 700 to 1000 candle power hours. The oil he used at the Dawsholm gas works for enriching purposes had a specific gravity of ·85, cost about half the price, and yielded over 1500 candle power hours per gallon. This difference was accounted for by the fact that the mixture of air with petroleum gas materially reduced the candle power. Whenever air was mixed with gas the candle power was lowered very materially. One per cent. of air reduced it about 6 per cent., so that it seemed to him there was a considerable mixture of air in this case. He did not think that atmospheric pressure would affect the question at all, because there would be the same pressure on the top of the system as obtained at the burners, and it would equalise itself at both places.

Mr James Mollison (Member) observed that Dr Purves had assured them that this apparatus was quite free from fire and explosion, and at page 23 he mentioned that the cost of the aero-gas was about 3s 4d per 700 to 1000 candle power hours, dependent upon the quality of the petroleum used. Dr Purves no doubt was able to get the best quality in the market, but if this system came to be generally adopted, how were the public to distinguish between the 700 and 1000 candle power quality? He would therefore like to ask if there was any ready means of testing the quality of the *petroleum* so as to be sure of its safety and efficiency?

Mr Sinclair Couper (Member) asked whether Dr Purves had made any experiments with this gas producer for supplying gas to small furnaces for heating rivets, and whether he had tested the gas made by this producer for its value as a heating agent;

Mr Sinclair Coup·r.

and, if so, perhaps Dr Purves would state the results he had obtained?

Mr Robert Watson considered that the very simple and ingenious apparatus brought before them by Dr Purves, as it stood, was open to a rather serious objection, namely, possible danger of fire or explosion, besides causing a disagreeable smell in the rooms where it might be used. He had no experience of the apparatus described, and his reason for speaking was simply to elicit further information on the subject. In the apparatus air was admitted through a regulator, and unless that regulator was constructed to prevent the exit of carburetted air by diffusion, there would be at least a smell of the spirit used in carburetting the air. So long as the lights were burning, he could quite understand there would be no danger or smell if the regulator was so adjusted that the speed of the inflowing air was greater than the rate of diffusion outwards of the vapour, but when the light was shut off there seemed to him to be nothing to prevent diffusion. Dr Purves said that the oil was in practically a solid state, but with that statement he could not agree. If the solid, liquid, and gaseous states of matter were regarded as different degrees of subdivision, then the oil in the fine state of division brought about by the absorbent wood pulp approached more the gaseous than the solid state. Dr Purves had described an experiment of forcing the flame backward through the carburetter. He could quite understand that no explosion would take place in that instance. In fact, the same results would be obtained if the apparatus were inverted and filled with coal gas, but a very different result would be found by forcing the flame into a mixture of, say, 1 of gas to 4½ of air. He concluded therefore that the highly carburetted mixture having, say, 17 per cent. of gasoline by volume was not explosive though inflammable, although when mixed with air in the cylinder of a gas engine it was explosive. It might be objected that as the carburetted air was heavier than the surrounding atmosphere it would lie quietly in the reservoir until wanted. Carbonic acid gas was heavier than air, but a vessel full of it, if open to the

Mr Robert Watson.

atmosphere, would become empty, and he knew of no better way of getting the residue of any volatile oil or spirit out of a bottle than simply leaving the cork out. However, that objection if it existed might be surmounted by the adoption of double pipes, one leading from the bottom of the oil receiver and terminating at the gas burner, and the other leading from the stop-cock on the gas pipe to the top of the carburetter. The carburetter could be hermetically closed to the atmosphere except when the lights were burning. A double-way cock would serve for both turning on the gas and admitting air to the carburetter. The "head" of gas and the size of pipes would of course have to be increased to overcome the increased friction. It was possible that that plan might not succeed in practice owing to diffusion making the mixture of air and vapour the same in both pipes, when, of course, the downward current would not take place.

Professor A. **Barr**, D.Sc., (Member) asked if Dr Purves had made experiments on the possibility of the flame going back when the reservoir was almost exhausted of the oil? Dr Purves had said that the mixture was not explosive when the carburetter was fully charged, but it seemed to him that there might be a danger of its being explosive when the carburetter was almost dry of oil.

Mr E. **Hall-Brown** (Member) asked if there was any means of knowing when all the hydrocarbon was exhausted from the carburetter. In driving a motor car, must one count how many hours he had been running, or was there any means by which one would know how much was left in the reservoir? Dr Purves had shown them a diagram of the luminosity of the flame, in which the curve continued constant for a long time. That might be the case if too much gas was not drawn off; but, if as much were used as the apparatus would produce, he did not know how long the supply would continue constant. Would the curve have a big hump, and drop suddenly after a short period of maximum supply?

Correspondence.

Mr **Quintin Galbraith** stated that he had had 25 years' experience of Hearson's, Müller's, and Laidlaw's machines, all of which drove air under pressure by means of weights and fans through the gasoline, and he could testify to how well they had done their work, especially Hearson's and Müller's, neither of which used any absorbent. If this new producer gave as good results, and as economically, without any mechanical arrangement, it was undoubtedly one that would be appreciated. He was very doubtful about the new producer being used to light a country house from one point, where gas would be generated; the pressure required to drive the gas through the pipes would be apt to vary with the state of the atmosphere. All the power at command would be the difference in weight between the vaporised gas and the outside air —the one varied with the quality of the gasoline used, and the other with the weather. When it happened that both were against the gas, there would be bad light, or none at all. He had had this trouble to contend with, even where powerful mechanical appliances were in use to force the air through the gasoline, and could only surmise how much more difficult it would be with no appliance at all. However, perhaps Dr Purves would get over that.

Dr **Purves**, in reply to the point raised by Mr Galbraith concerning the doubtfulness of a complete installation, said that it had been tried in France on a very large scale. It was used at Lyons for the illumination of a hospital, barracks, church, and college; and the gas fountains were stored in the upper regions of these buildings, in battery form, each one being connected with its neighbour; and from the end fountain of the battery there was a complete system of graduated piping through the entire establishment. These installations had been found to work with the utmost satisfaction. The authorities who controlled these various establishments were highly satisfied with the operations of the system. No difficulty was experienced in supplying the whole of the establishments from one central reservoir or battery of small reservoirs, and it would therefore appear that the weight of the

Dr Purves.

gas itself being, as Mr Rowan had pointed out—and pointed out correctly—three or four times the weight of air, was amply sufficient to produce a flow sufficient to overcome the friction in the pipes. He might say that in these large installations great care was taken that no sharp bends should be used. All the bends were curved so that there might be as little resistence as possible. As to the motor cars, he was sorry that, in speaking of them, he was hampered in his paper, and hampered still by the fact that the special carburetter he referred to was only provisionally protected in this country, and he was not at liberty to explain the full mechanism whereby certain difficulties raised by Mr Murray had been got over. Regarding the use of petroleum in the carburetter, the effieiency and the saving effected were very marked. On the 6 H.P. Daimler motor, on which he had experimented, it was usual to take about 1 gallon of petroleum to a run of 20 miles, and he thought that was a very reasonable amount to consume in a vaporising motor. In experiments with the gas-fountain driven car, he found that the amount of petroleum used per 20 miles, on the run from London to York, amounted roughly to half a gallon—a saving which surprised all concerned. It was also found that on uphill work the car seemed to have very much more power than when driven with vaporised oil, which he attributed to the well-known fact that a gas engine was a more efficient piece of mechanism than an oil engine ; and no doubt the majority of those present who were conversant with oil and gas engines would agree with him that the effect produced was practically the conversion of an oil into a gas engine. He was sorry if he had not replied to all the questions asked, but he had no doubt that they would understand how he was handicapped in the matter. Mr Rowan mentioned Pintsch's gas as being produced at some 10s per 1000 cubic feet. He was pretty familiar with a good many of the Pintsch installations in this country, but he knew none where gas was produced at less than 12s per 1000 cubic feet, and the majority of them ranged between 15s and 17s. Mr Rowan also stated that the weight of the gas was between 3 and 4 times the

Dr Purves.

weight of ordinary atmospheric air. That was true when the petroleum used had a specific gravity of ·680, but if the petroleum used was of 2·650 specific gravity, the weight was approximately 2¾ times the weight of atmospheric air. Mr Norman Macdonald had mentioned the run made with the car, and he was able to state the saving that had been effected, and to speak of the admirable hill-climbing properties of the car. Mr Foulis wished to know the chemical composition of the gas. He might say that it was rather a difficult thing to arrive at. However, from experiments made, he had come to the conclusion that there was a certain percentage of the constituents of the atmosphere in the gas. A small percentage of oxygen was found, as also some nitrogen, proving that in the mixture, air was actually present as a constituent of the gas. He was not able to state the precise quantitative results of the analysis as yet, but he hoped to be able shortly to do so. The quality of petroleum found most suited for lighting and heating had a specific gravity of from ·650 to ·660; but petroleum could be used up to ·680. At that point, however, the efficiency was not so great, neither was the light so pure or satisfactory. The residue left by using this oil was very small indeed, and he might say that he had in his laboratory one of the oldest apparatus, which had been in continuous use for over 2½ years, and the amount it absorbed was practically the same as it did at the very beginning. It appeared that the amount of residue was very small, and the amount of clogging up of the absorbent very trifling indeed. If the petroleum clogged up the absorbent, it was so easily replaced and so cheap in itself that this would not really be a serious matter. The material in use as an absorbent cost from 5s to 6s per cwt., so that to fill the box cost practically the fraction of a penny; therefore, he did not think it was a serious matter, looking at it from a commercial point of view. The ordinary Daimler car had an air regulator just at the motor itself, and it was found that in coupling up the carburetter to the motor, the motor could be worked with this air regulator altogether closed, using nothing but the mixture of gas and air which came direct from the carburetter to the regulator.

Mr Foulis—How did that correspond with the statement that Dr Purves had already found a small proportion of oxygen in the gas when he tested it chemically?

Dr Purves—It appeared to him that the amount of oxygen in the gas was sufficient to produce the requisite explosion when under pressure.

Mr Foulis—Was it not the case that air was being drawn through the opening?

Dr Purves—Doubtless that was so when the carburetter was coupled up to an engine where the piston drew the air through the carburetter, but the particular regulation of the quality of the gas was the subject of a fresh patent which he was working at at present. Professor Watkinson raised a question with respect to the use of paraffin. A very blue and inefficient light only could be obtained from paraffin, even when air was forced through it at ordinary atmospheric temperature, and of necessity one of the lighter and much more volatile hydro-carbons must be used. Indeed the purer the hydro-carbon the more efficient was the apparatus. His first intention was to read the paper in London, but Mr Parker persuaded him to bring it before the Institution, and he assumed the usual average power of coal gas to be 14 candle power, but Mr Wilson was quite right in saying that if he compared the Notkin gas with the gas in Glasgow, which was 20 candle power, it worked out at about 4s 9d per 1000 cubic feet. That was perfectly correct. Mr Mollison referred to the public and the test of efficiency of the gas. Of course it would be a dreadful thing if the public had to set up a photomotor to ascertain the efficiency of the gas, but its quality depended almost entirely upon the particular petroleum which was used, and that which needed to be tested was not the gas as produced from the lamp, but the petroleum which was purchased.

Mr Mollison—It was the petroleum he spoke of.

Dr Purves—In that case the simplest thing was to weigh the petroleum. Petroleum of ·650 specific gravity was required, and a gallon should weigh 6·5 lbs. If it was heavier it should be

Dr Purves.

returned for petroleum of the correct density. Although he had not had an opportunity of trying it, he could assure Mr Couper that there was every reason to believe that this was an admirable gas for heating purposes. He would like those interested to feel the heat given off from the ordinary Argand burner that was on exhibition. He had tested it in comparison with a similar Argand burner with gas in Edinburgh, which was said to be of 28 candle power, although he was sure it was not, and the result was that the gas from the fountain had a very much higher calorific value than the so-called 28 candle power gas in Edinburgh, so that he concluded that it would be highly useful for furnaces. It might, of course, be rather expensive, seeing that compared with 20 candle power gas they had to pay 4s 9d, but in country places he thought it would be a good thing for small furnace work. Mr Watson drew attention to the possibility of fire, explosions, smell, and the other objectionable features pertaining to paraffin lamps. With respect to fire, he did not think there was much danger. One could light a match at the top orifice without being able to ignite the contents. A light might be applied to the tap when turned on and left without remembering to light the gas, in which case the gas, on account of its small specific gravity, fell upon the floor where it very speedily ran away into all the crevices, and if one tried to light it on the floor he would not succeed. He had tried experiments all over his office floor, and the carpet had not suffered, so that, as far as fire was concerned, he did not think this was a dangerous apparatus. It was very much less dangerous than a paraffin lamp with a considerable supply of liquid paraffin in it. He had tried every conceivable artifice to set the apparatus on fire, without success. He could only produce an explosion, so far as he had tried, by putting it under considerable pressure as in the cylinder of a motor car, and there they got a very powerful explosion. As to diffusion, he had a lamp in continual use, and he never thought of screwing the cap in, and when he came to his office in the morning he failed to detect any smell. He agreed that it seemed likely that there *would* be diffusion, but still, from practical experience, he found that there was practically no smell at all. Further, as soon as the lamp was lit the draught was produced downwards as pointed out, and there could be no possibility of smell. No doubt the best plan was to screw on the button when one left at night, and to leave the lamp in that way. With regard to the use of the word "solid," he merely had made use of it as a manner of speech to clearly differentiate the substance in the box from a liquid, but he did not mean to say that it was a solid in the technical sense of the word. The major portion of what was in the interior was solid, and that was what he intended to convey; he meant that there was no loose liquid, and probably that would have been a better way of putting it. The double pipe suggested would be a solution of the difficulty, but, as a matter of fact, he did not think that it was necessary. Dr Barr suggested the possibility of the flame going back when the lamp was almost exhausted. He had burned these lamps again and again till they went out, with the object of getting the true curve of the flame for his own experiments, and he had, at various stages of the experiments, tried if he could induce a back draught so as to produce an explosion in the apparatus, and he had been unable to do so. He had put a small suction apparatus on the top when the gas was practically expiring, but he could not get an explosion, and he judged that it was extremely difficult to get an explosive mixture. The reason of that he did not know, but probably some of the more scientific members present might be able to arrive at the proper solution. It was easy to tell when the carburetter was exhausted as the flame took a rapid downward drop. When it dropped too low it was time to re-fill the carburetter. As to the motor car, it was true that they had no indication when the carburetter was exhausted, except by a weakening of the running of the engine, which became apparent. Two carburetters could easily be coupled on to the motor, so that when one was exhausted the other could be used. Mr Murray raised a question regarding the size of the carburetters carried. These were about 2 feet in length by a foot each way, built to go

Dr Purves.

under each side of the waggonette, and each held approximately 3 gallons of petroleum. That was to say there was altogether a supply of 6 gallons on the car, but that was for experimental purposes only, and the carburetters were not charged as fully as they might have been. Charged to a fuller extent the size might be reduced, but he erred on the safe side.

Mr ROWAN—Had Dr Purves ascertained the weight?

Dr PURVES—Unfortunately he had no knowledge of the precise weight, but he should be glad to look into that. He had the weight of the absorbent and the precise weight of the carburetter, and he should be glad to send Mr Murray these particulars.

The PRESIDENT said this was the second occasion on which he had had the pleasure of proposing a vote of thanks to Dr Purves for a paper read before the Institution, and he would ask him to believe that the pleasure was progressive. He thought that Dr Purves must be pleased with the interest which the members of this Institution had shown in the paper, as evinced by the discussion, and also by the somewhat searching cross-examination that he had been subjected to, and he thought he would agree that while they of the West might be curious, they were also courteous. He had much pleasure in tendering Dr Purves the cordial thanks of the Institution.

The vote of thanks was carried by acclamation.

MARINE ENGINE SHAFTING.

By J. D. M'Arthur (Member).

Held as Read 23rd October, 1900.

So much has been written within recent years on the subject of marine engine shafting—propeller shafts in particular—that it is difficult to introduce the subject without laying one's self open to a charge of plagiarism. The gravity and importance of the subject, however, are fully borne out by the number of papers read before meetings of kindred societies throughout the country, and the interest displayed in them; and I hope no further excuse will be needed for bringing the matter under the notice of this Institution.

Notwithstanding all that has been written on the subject, no very definite conclusion seems to have been established concerning the cause of the great number of propeller shaft failures; nor is there much apparent unanimity as to the remedy. Some engineers recommend linerless shafts to be fitted, running on white metal stern-bushes, others advocate larger shafts. The latter view has been endorsed by the Board of Trade and the principal Registration Societies who now require shafts to be fitted considerably in excess of the old regulations. There are engineers, responsible for the design of steamers' machinery, who have hitherto made it a rule to fit shafts as much as 25 per cent. in excess of Lloyd's requirements. The question therefore arises, are shafts made in accordance with the regulations which were till lately in force really strong enough for their work, or is defective manufacture or design responsible for the growth in the number of casualties? Or, can the increase be accounted for by any change in the working conditions imposed since the old regulations were originally framed?

The recent tendency, with regard to cargo steamers, has been in the direction of large carrying capacity on a minimum draught, with full lines and little rise of floor. Vessels of this kind are frequently despatched in the ballast condition on long voyages; the propeller is immersed, say from two-thirds at the commencement to one-half at the end of the voyage, and it requires very little sea to cause a great variation in the immersion of the propeller, with the consequent racing of the engines. I refer particularly to steamers of the "tramp" class, 90 per cent. of which do not possess an efficient governor. Racing inflicts severe and sudden stresses on the propeller shaft, but even in still water the constant shock of each blade as it enters the water at a high velocity sets up percussive stresses of a nature injurious to the metal of the shaft, particularly if it be made of steel. The tips of the blades of a propeller 17 inches in diameter, revolving at 75 revolutions per minute, enters the water with a velocity of 68·8 feet per second, the ship's speed being about 10 knots.

Further, in the light condition of loading, stresses of another nature are produced in the propeller shaft, which must be taken into account. These are set up by bending moments, due to the weight of the propeller and to the difference of thrust on the wholly and partially immersed blades. This difference of thrust varies with the degree of immersion, and it may be of considerable amount. The bending moments are also influenced by the diameter of the propeller and the form of its blades.

For the purposes of illustration, take an engine of ordinary dimensions, having cylinders of 24 inches, 41 inches, and 67 inches diameter respectively, with a stroke of 45 inches and a boiler pressure of 180 lbs. per square inch. This engine would develop a maximum of 1600 I.H.P. at 65 revolutions per minute, and under light conditions of loading (water-ballast and a few hundred tons of bunker coal), 1250 I.H.P. at 75 revolutions per minute; speed of the ship being 9¾ knots; propeller four-bladed, 17 feet diameter and 17 feet pitch, weighing 6 tons in water, with an effective overhang of 2 feet, and distance of centre of pressure on blades to the centre of the shaft 5 feet. The size of tail-shaft required would be—

1. By Board of Trade (1898) rule :—

$$\text{Diameter} = \sqrt[3]{\frac{C \times P \times D^2}{f\left(2 + \frac{D^2}{a^2}\right)}} = \sqrt[3]{\left\{\frac{22{\cdot}5 \times 195 \times 67^2}{\left(1110 \times \frac{85}{100}\right)\left(2 + \frac{67^2}{24^2}\right)}\right\}}$$

$$,, \quad = 12{\cdot}87 \text{ inches.}$$

2. By Lloyd's rule :—

$$\text{Diameter} = ({\cdot}038\,A + {\cdot}009\,B + {\cdot}002\,D + {\cdot}0165\,S)\,\sqrt[3]{P} \times \frac{21}{20}$$

$$,, \quad = 12.8 \text{ inches.}$$

3. By British Corporation formula :—

$$\text{Diameter} = \sqrt[3]{\frac{P \times L^2 \times S}{C}} \times B = \sqrt[3]{\frac{95 \times 67^2 \times 45}{21510}} \times 1{\cdot}1$$

$$,, \quad = 13{\cdot}46 \text{ inches.}$$

Practically the sizes would be for 1 and 2, 12⅞ inches, and for 3 13½ inches.

Assuming the nett effective H.P. as delivered by the propeller to be one-half the I.H.P., under light conditions with boss just immersed, then

$$\text{Mean Normal Thrust} = \frac{625 \times 33000}{9{\cdot}75 \times 101{\cdot}3}$$

$$,, \quad ,, \quad = 20882 \text{ lbs.}$$

$$,, \quad ,, \quad = 9{\cdot}32 \text{ tons.}$$

The thrust will have its greatest bending effect on the shaft when the blades are at an angle of 45 degrees with the horizontal or vertical; it will then be wholly taken by the two lower blades, and the effective length of lever will be $\frac{5\sqrt{2}}{2}$ feet $= 3{\cdot}5355$ feet.

$$\therefore \text{Bending Moment} = 9{\cdot}32 \times 3{\cdot}5355 \text{ ft. tons.}$$

$$,, \quad ,, \quad = 33 \text{ ft. tons nearly.}$$

Add Bending Moment due
to weight of propeller = 12 ,, ,,

Then total Bending Moment
on the propeller shaft = 45 ft. tons, acting at or near the end of the outer liner.

There is also the twisting moment. Assuming the nett horse power which is transmitted by the shaft after making allowance for pumps, etc., to be ·8 of the I.H.P.

$$\text{Then mean Twisting Moment} = \frac{33{,}000 \times 1250 \times \cdot 8}{2\pi \times 75 \times 2240} \text{ ft. tons.}$$

$$\text{Twisting Moment} = 31{\cdot}25 \text{ ft. tons.}$$

The moment equivalent to a bending of 45 ft. tons, and a twisting moment of 31·25 ft. tons will be—

$$M^e = 45 + \sqrt{45^2 + 31{\cdot}25^2}.$$

$$M^e = 100 \text{ ft. tons nearly.}$$

This is sufficient to produce a stress of 6400 lbs. per square inch in the 12⅞-inch shaft as required by the Board of Trade and Lloyd's rules. There is also the direct thrust along the shaft equivalent to a compressive stress of 160 lbs. per square inch.

When the propeller is fully immersed, the bending moment, except that due to the weight of the propeller itself, will in a great measure disappear. The twisting moment at full power loaded may then be taken as $\dfrac{33{,}000 \times 1600 \times \cdot 85}{2\pi \times 65 \times 2240}$ or mean twisting moment = 49 ft. tons.

The equivalent moment becomes 62·44 ft. tons, and the stress per square inch on the 12⅞-inch shaft, 4000 lbs.; so that the stress on the shaft is 60 per cent. greater in smooth water when the ship is light, than when she is loaded and indicating full power with her propeller wholly immersed.

The stress when loaded is also comparatively steady and of one kind, while the larger component of the stress of 6400 lbs. per square inch set up when light, is being constantly varied and reversed from a maximum tensile to a maximum compressive. This will produce its greatest effect at or near the outer end of the outer liner; its nature and intensity will tend to develop any small surface flaws, and at the same time render the metal at these points more liable to be attacked by salt water, or by the galvanic action induced by the iron, brass, and sea-water. I consider want of stiffness to be the primary cause of the excessive corrosion which takes place at the end of the liner, and galvanic action only the secondary.

To secure the desired stiffness there are two alternatives, namely, an outer bearing in the rudder-post, or an increased size of shaft. The former method was employed in the earlier days of screw propulsion, and abandoned no doubt for sufficiently good reasons. It is certainly not applicable in the case of twin-screw steamers, or to vessels constructed without a rudder-post. The latter therefore remains as the only way out of the difficulty, unless the necessity for increased strength be itself removed by the determination of a light-load line, and this will probably not commend itself to shipowners, who consider themselves sufficiently bound up with the red tape of shipping laws as they stand. Personally, however, I consider that cargo steamers should be supplied with some means of carrying water-ballast for use on long voyages or during severe weather, such as deep tanks abaft the engine-room bulkhead, in addition to the double bottoms. Some of my recollections of voyages in tramps running light are anything but pleasant, and from experience I can vouch for their unmanageableness in anything approaching stormy weather.

Another point may be referred to as contributing to the frequency of shaft-failures with three-crank triple-expansion engines. To develop 1600 I.H.P. at 65 revolutions per minute, a compound engine, working at a pressure of 100 lbs. per square inch, would require cylinders of about 35 inches and 70 inches diameter respectively, with a stroke of 48 inches. By the rules of the Board of Trade (1898) and Lloyd's, the tail-shaft would be 13⅝ inches in diameter as against 12⅞ inches for the triple-expansion engine indicating the same power; that is to say, the triple-expansion engine shaft only requires 84 per cent. of the strength of that of the compound engine. This allowance in favour of the triple-expansion engine was made presumably on account of the more equable nature of the turning effort on the crank-shaft. The twisting moment in the tail-shaft may be looked at, however, as arising from the resistance offered to the propeller blades by the inertia and friction of the water; and so long as the velocity of the blades does not alter, and they remain fully immersed, the resistance will be constant. In compound engines working at the ordinary full-speed revolutions—from 55 to 65—I do not think there is sufficient variation of speed during a revolution to cause any appreciable fluctuation in the velocity of the blades, so that the twisting moment on the propeller-shaft will be at all events approximately constant; and further, the resilience of the great length of intermediate shafting will tend to abolish, or at least modify considerably in the after-lengths, the ratio between the maximum and minimum twisting moments as they exist in the last journal of the crank-shaft.

Failures of propeller shafts were by no means uncommon in the days of compound engines. It would therefore seem that the reduction in size allowed to triple-expansion engines was inadvisable, and that the same size of shaft should have been enforced for three- or multi-crank engines as for those with two, indicating the same H.P. at the same number of revolutions. The growth in the number of broken and condemned tail-shafts during late years may, I think, be attributed directly to the more severe conditions of working imposed by fuller lines, greater distances covered in the light condition, and the reduction in the strength of the shaft till lately permitted.

The foregoing figures probably understate the actual condition of affairs rather than the reverse. They are influenced more or less in actual practice by the weight and design of the propeller. Some propellers are undoubtedly much heavier than there is any need for. In one case that came under my notice the steel blades were nearly three inches thick at the tips. Propellers with broad tips tend to cause a greater bending moment than those of the opposite order, by increasing the radius of the centre of pressure.

The conditions I have assumed under which the stresses are produced are not at all unusual, and should be more favourable to the shaft than those obtained in practice, for no account has been taken of the hammering action of the propeller blades on the water, nor of the sudden stresses produced by racing of the engines, and the violent pitching of a light ship in a rough sea-way. All of these contribute their quota to the trials of a tail-shaft, but are remediable to a great extent by sufficient immersion.

Brass liners are a source of weakness, especially when they do not cover the whole length of the shaft in way of the stern tube. They concentrate the stresses at the points of change of section, and do further mischief by assisting corrosion.

For determining the size of the tail-shaft, the new rules of the British Corporation are a distinct step in advance of Lloyd's, and also considerably ahead of the Board of Trade rules. Both the diameter of the propeller and the co-efficient of displacement have been introduced as factors affecting the result, the multiplier B increases directly with the co-efficient of displacement and ratio between diameters of propeller and shaft. Lloyd's rules also include the diameter of the propeller, and require a shaft without liners or with separate liners to be $\frac{21}{20}$ths of the diameter of one fitted with a continuous liner. A set of engines of the sizes given, fitted on board of a steamer whose co-efficient of displacement at $\frac{4}{5}$ths of the moulded depth is ·78, will now require a tail-shaft 14 inches in diameter to satisfy the British Corporation; while Lloyd's would require it to be 13$\frac{3}{4}$ inches with a continuous liner, and 14·45 inches with two liners or none. With such an increase in size, one will naturally expect comparative immunity from tail-shaft troubles in ships built under the new rules, and any that do occur will probably be traceable to initial flaws or defects in manufacture, such as the presence of steel amongst wrought iron in shafts built of scrap. One often hears of a ship with a bad reputation for breaking shafts, but rarely of a satisfactory explanation of the cause of the trouble, though I have heard the following opinion expressed as the probable cause of frequent failures. A ship breaks her shaft, or has it condemned during survey.

Quotations are at once asked for a new shaft to be delivered within so many hours, and the job is given to a firm who happens to have in stock a shaft somewhat larger than the size required. This shaft is put into the lathe and turned down to suit, the diameter being reduced perhaps by an inch or more, thus removing the soundest and most reliable part of the metal, with the result that this shaft also proves itself unequal to its work. A plan which might be adopted with advantage in the case of persistent trouble, would be to replace the lignum-vitae by white metal, and to increase the diameter of the new shaft to that of the old one over the brass liner, which would be done away with. Shafts are often specified to be made of best selected scrap iron, in preference to mild steel, the latter having been found less reliable, and to become short and brittle much more rapidly than iron under the percussive or vibratory stresses to which the tail-shaft is subject. Selected bar iron has, I understand, been used to some extent lately with satisfactory results, and attention is also being directed towards the adaptability of nickel steel for the purpose.

With regard to the finish of intermediate shafting, it is in my opinion much better rough-turned than finished either black or bright. If left black it generally means that the shaft has been light-hammered to smooth and straighten it up. This is a bad practice as it tends to set up internal stresses in the metal. These stresses may be partially relieved and the weakest part of the shafts removed by having them made hollow; and in virtue of this, inducements to use hollow-shafting might be put forward by allowing them a greater stress per square inch. At present they are seldom seen except in Admiralty and other high-class work, the element of cost being deterrent to their more general adoption. Flaws are not readily detected on the black surface, and they are very often further concealed under several coats of oil-paint. Bright shafts mean a good deal of work at sea, and after all do not exhibit flaws so plainly as those rough-turned and covered with a thin wash of zinc-white and turpentine. However slight it may be, any working or slackness about coupling faces, bolts or nuts, can be seen at a glance if they are carefully painted with this.

The use of sea-water on tunnel-bearings is very common, though it might be dispensed with in a great number of cases if a little more attention were paid to the lubrication of the journals. There is nothing in its favour except expediency; it has a bad effect on journals and bearings and keeps the tunnel in a dirty condition. Certainly when the bearings are run with oil, a small drip of water just sufficient to mix with the oil may do no harm, but anything above this is detrimental, and there is always the temptation when a little is allowed to make it much and save trouble to the man on watch. Any difference in the cost of lubricant due either to increased quantity or improved quality, so as to do away with the use of water, will be well-earned by the longer life of the bearings, better condition of the journals, and less frequent need for the shaft being lined-up.

There is some difference of opinion regarding the best position for the aftermost bearing in the tunnel; some makers place it abaft the tail-shaft coupling close to the stern-gland, and others at a distance of some feet from the bulkhead. In favour of the former method it may be said that the weight of the shaft is kept off the gland, and also when the journal is a little larger than the diameter of the shaft over the liners it can be drawn out more conveniently. The latter plan is, however, the most favourable to the shaft, as when the stern-bush is worn down perhaps ¼-inch, to ⅜-inch in an extreme case, the deflection is spread over a greater length, and the consequent stress reduced thereby.

The horse-shoe type of thrust-block, though conveniently adjusted and overhauled is not altogether favourable to the shaft. In the first place, on account of the depth of the collars, the forging is heavy; and, in the second place, the part most likely to be sound is cut into and removed to form the collars, and from the shape of the shoes not much more than the upper half of the collars take the thrust at one time, The shaft should for these reasons be of ample size, and carefully examined for flaws and unsoundness between the collars. Two sister ships in which I sailed had their thrust shafts condemned and removed. The shafts were about 14 inches in diameter, and 25 inches over the collars, of which there were nine. When about eighteen months old they developed longitudinal cracks on each side, about 12 inches long, at about the middle of the block, the cracks and axis of the shaft being in the same plane. The appearance of the cracks suggested that the shaft had been built of two slabs laid together, and that the weld had not been perfect near the centre of the length. In a case of this kind where the shaft might reasonably be supposed to be made up of two semicircular portions, in close contact, yet distinct for the length of the crack, 12 inches, the question arises —What would be the stress per square inch when transmitting 1500 I.H.P. at 60 revolutions per minute? Some member of the Institution might afford a reply when this paper is being discussed.

Discussion.

The discussion on this paper took place on 20th November, 1900.

Mr James Stark (Member) observed that Mr M'Arthur attributed a very large share of the blame of the frequent failure of tail-shafts to vessels running long distances in ballast and under light conditions of loading, but he found the very same thing taking place apart from these conditions. He remembered a steamer with engines indicating from 1300 to 1400 H.P. which had a tail-shaft 12 inches in diameter, and a propeller weighing 8½ tons, overhung about 7 inches beyond the after bearing. That shaft was a quarter of an inch larger than Lloyd's requirements and nearly half an inch larger than those of the Board of Trade. After having been in use for four years, the shaft was drawn for inspection and found to be deeply grooved at the forward end of the after liner, and also, though to a considerably less extent, at the after end of the forward liner. It was condemned, sent to the forge, and the ball dropped on it, when it broke with the first blow. It was then seen that only a section of the shaft 10 inches in diameter was left sound, the groove having penetrated about an inch all round. There was also a spare tail shaft of exactly the same description on board the ship; it was fitted, the vessel proceeded with her usual work, and was again subjected to little or no excessive stress by reason of lightness of draught or by the bending moments of the propeller under such conditions. After the experience of the first shaft the same length of time was not allowed to elapse before an examination, and the second shaft was drawn after an interval of a little over two years, when it was found to be going in exactly the same way, but not to the same extent. The condition of both of these shafts after such a short life demonstrated that something was wrong, whatever it might be. There could be little doubt that they were a great deal too small for their work. He had also had experience of the shafts of two other ships, with engines indicating from 1600 to 1800 H.P. The shafts of these steamers were each 13 inches in diameter, and the propellers weighed about 9 tons. These ships worked under precisely similar conditions, and never ran any distance in ballast trim. In the one case, the shaft was drawn for examination after four years use, and, as it was found to be badly grooved at the after liner, it was condemned and a spare shaft fitted. In the case of the other ship, which had been exposed to the very same conditions, the shaft was drawn after four years, examined, and put back again without anything whatever being done to the bush. It was drawn again after two years, and a few of the staves of the lignum vitæ were renewed, and the vessel was now running with the shaft apparently good for a considerable period to come. He saw no reason to believe that there was anything wrong with the material of the shafts that failed, and it would perhaps be hard to say that the 13-inch shaft was too light for its work, because in the one case it had stood its work for nearly eight years very well indeed, though in the other case it had failed in four years. These things were not easily explained, although he believed that all the shafts he had referred to were too light; at all events, he would take very good care that such light shafts were not fitted in these ships again.

Mr HECTOR MACCOLL (Member) said that this was a subject

Mr Hector MacColl.

on which his views were pretty well known, and he did not intend to discuss the paper in great detail. His own experience had been different from that of the gentleman who had just spoken. He knew of vessels with shafts fitted in accordance with the Board of Trade Rules which had been running for twelve or fourteen years without anything having been done to them; he knew, on the other hand, shafts that had been running under totally different conditions which had not run as many months as the others had run years, and he would attribute the difference to well ascertained causes. In fact, the whole subject of the recent history of the breakage of shafts was perfectly defined. Down to the time when vessels were not sent on long voyages under water-ballast there was the ordinary every-day wear and tear of shafts, and they ran a regularly recognised time. Then came the time when shipowners seemed to think it was necessary to run vessels in water-ballast for long distances and in all weathers, and from that time till now he thought every one would admit that the breakage of tail-shafts had been perfectly abnormal. He entirely agreed with what Mr Hamilton had said as to the light load-line. He believed that a light load-line was of far greater importance to-day than a deep load-line. They did not find, for example, with the modern class of ship that the vessel could be put down to her marks with an ordinary cargo, so that the question of the deep load-line did not come in. But the running of long voyages in ballast trim had introduced an element of danger into the structure of the ship, affecting the comfort of the crew and the safety of their lives, which required to be dealt with in a much stronger way than the original question of the deep load-line. Then with regard to Mr M'Arthur's question at the foot of the first page of his paper, "Are shafts made in accordance with the regulations which were till lately in force really strong enough for their work?" From his experience the rules were perfectly sufficient for the condition of affairs which existed at the time they were made. These conditions were entirely changed, and he thought the rules had properly changed with them. Mr M'Arthur had asked whether the increase in breakages of shafts could be accounted for by the working conditions, and an affirmative answer was implied in all that he had now said. The only other point that he wished to make any remarks upon was in the second paragraph of page 43, where Mr M'Arthur said, "To secure the desired stiffness there are two alternatives, namely, an outer bearing in the rudder-post, or an increased size of shaft. The former method was employed in the earlier days of screw propulsion, and abandoned no doubt for sufficiently good reasons. It is certainly not applicable in the case of twin-screw steamers, nor to vessels constructed without a rudder-post." Most of the older generation of engineers knew why outer bearings were abandoned in the rudder-post; the idea was good, but when steam steering gear and high speeds came in, the rudder-post, instead of being a support for the shaft, as it was originally intended, had its functions entirely changed and it broke the shaft by means of the side strains which it introduced. He entirely agreed with Mr M'Arthur when he said that one of the alternatives was to have an outer bearing; but, as would be seen from Fig. 1, it was not necessary that it should be on the

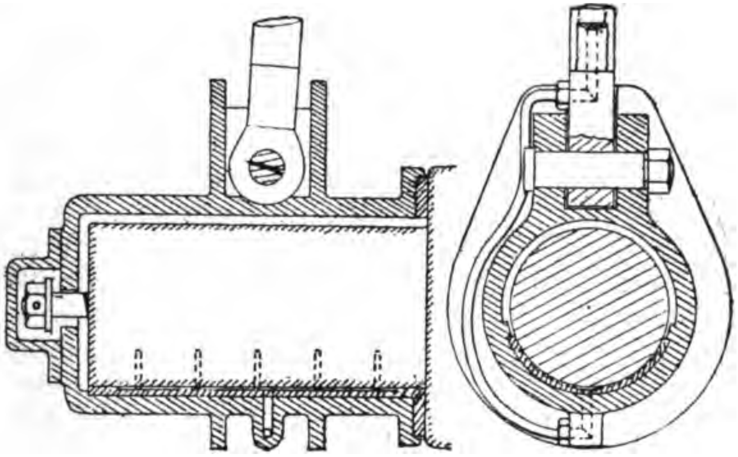

Fig. 1. Maxton's outer bearing.

Mr Hector MacColl.

rudder-post. This was not a proposal on paper, it was a plan which had been adopted with considerable success in a twin-screw steamer and was likely to be applied to others. This bearing was simply suspended and was intended to take a proportion of the weight off the inner bearing, and no doubt it would have a great effect in increasing the life of the shaft. The suspending rod attached to the pin was inclined at a considerable angle to the shaft so as to compel the bearing to press against the propeller nut; and to prevent the whole bearing from dropping off, a stud and nut were fitted as shown. That, he believed, was a step in the right direction, and the bearing was applicable, as they could easily understand, not only to twin screws but to the ordinary single screw.

Mr ALEXANDER CLEGHORN (Member) considered the subject of the paper had always been of great interest to marine engineers, and at no time more so than the present, as was shown by the alterations just made by various Registration Societies to their rules affecting the design and strength of marine engine shafting. He had, accordingly, perused the paper with great interest; and although it did not contain much original matter, it embodied fairly well accepted conclusions. Reference had been made to the smaller diameters of the shafting required by the Board of Trade, Lloyd's, and other Corporations for triple-expansion engines having three cranks set at equal angles, than for compound engines of equal power, and the presumable explanation thereof given in the more equable nature of the turning effort on the crank-shaft of the former type. Shorty after the introduction of the triple-expansion engine, he made for the late Dr Kirk curves of turning moments, embodying the effect of the inertia of the reciprocating parts due to the actual lengths of the connecting rods employed, together with the steam pressures, for a number of compound and triple-expansion engines, and found that, in well-proportioned engines of both classes, the ratio of the maximum to the mean moment and the ratio of the maximum to the minimum moment were only slightly greater in the compound than in the triple-expansion engine. He was therefore of opinion at that time, that too great a reduction in the strength of its shafting was being made in favour of the latter type. He also found that variations of the turning moment at the crank-shaft became extinguished in the after lengths of long lines of shafting due to their elasticity and inertia, so that, with a propeller sufficiently immersed, the turning moment on the propeller shaft was nearly constant, and thus largely independent of the type of engine employed. By far the greater variations of twisting stress on shafting were produced by the forces acting on the propeller itself, and these had been clearly recognised and set forth in the paper. Although he agreed that to some extent short brass liners on the propeller shaft, in way of the stern tube bearings, had a tendency to weaken the shaft by concentrating stresses at the points of change of section, yet he was of opinion that greater importance had been given to this objection than it deserved. He did not now allude to deterioration of the shaft through any galvanic action which might take place. The two principal factors upon which the additional strength of the shaft, on account of the liner, depended, were equality of the modulus of elasticity of both liner and shaft, and the grip which the former, due to its shrinkage on, had of the latter. Now the longitudinal and transverse moduli of elasticity of gun-metal were only about a third of those of iron and steel respectively, while, in more cases than one he would fain believe, the cohesion between shaft and liner, specially at the point in question, was very small. He was therefore not inclined to admit in amount the superiority in strength of the shaft continuously lined, which had been assigned to it by Lloyd's new rules, over that fitted with discontinuous liners. Further, no account seemed to have been taken in these rules of the manner in which the continuous liners were to be fitted. They might grip the shaft from end to end, or they might grip only in the way of the bearings, while the intermediate portion might be recessed so as to leave an annular space between the liner and the shaft, which, in Admiralty practice, was filled

Mr Alexander Cleghorn.

up with a mixture of red lead, white lead, and oil pumped in. In this latter case the continuous liner could afford little additional strength to the shaft. As to the material of which iron intermediate and propeller shafts were forged, exception had been taken to the presence of steel amongst the "scrap" iron. Certainly a piece of hard steel in an iron forging was ominous of trouble; but he could not agree with the view, taken by Lloyd's Register and others, that shafts made of a suitably proportioned mixture of small mild steel and iron scrap should be rejected. He had spoken on this point when Mr W. Carlile Wallace's paper on "Some Causes of Failure in Tunnel Shafting" was under discussion by the Institution, and he had no reason to alter the views then expressed. He thought that the iron in the shaft prevented it from becoming rapidly crystalline in structure, as was the case with pure steel subjected to vibration stresses, while the presence of steel increased the tensile strength and power of the forging to withstand fatigue due to reversals of stress. He would be glad to learn the opinions of other members on this point.

Mr HECTOR MOLLISON (Member) considered the author's preliminary apology for introducing a subject of such interest to engineers and shipowners hardly necessary, and though Mr M'Arthur had not perhaps thrown any new light on the subject, he had collected a number of interesting and generally accepted facts, which, based as they were on practical experience, could not be gainsaid. Mr M'Arthur rightly deprecated the reduction in shafting which took place at the time of transition from the two to the three-crank engine, for although the crank-shaft was undoubtedly working under more favourable conditions as the number of cranks was increased, still as any inequality of turning moment gradually disappeared as one went aft, until the tail-shaft worked under a practically uniform turning moment, it followed that though a reduction might have been justified in the forward shafting, the proper measure of the strength of the after shafting was the I.H.P. transmitted by it per revolution, irrespective of

Mr Hector Mollison.

whether that power was developed in a two- three- or four-crank engine. Want of stiffness was undoubtedly the primary cause of the failure of so many shafts, as the consequent continual vibration caused the shaft to become crystalline and brittle ; and he thought it would be a good thing where there was a spare shaft, to take out the working one, after it had been in use for some time, and, no matter how sound it might seem, give it a rest, substituting the spare one. A shaft so treated would eventually recover its original toughness, and be ready for service again in its turn. On account of its lesser liability to become crystalline, good bar iron was certainly preferable to steel for tail shafting; but bar iron shafting, as required by Lloyd's, was a term that was made to cover anything from shafting made from new puddled bars down to that made from the veriest scrap; and he thought owners who specified bar iron shafts should secure themselves by requiring the shafts to undergo some sort of test. Some bar iron shafts had come under his notice which were subjected to rather severe tests. The test pieces—12 inches long by 1¼ inches thick—were cut, placed between supports, and subjected to a serious of blows from a weight of half-a-ton falling through 6 inches, the pieces being reversed after each blow. The metal was thus continually worked backward and forward, and he thought that shafting made from material which stood such tests would be less liable to become "fatigued" under even the most trying working conditions. He had never heard the introduction of bronze tail-shafts into the mercantile marine seriously proposed, but if a shaft were wanted which would neither tend to become crystalline by reason of vibration, nor be liable to corrosion from galvanic action or other causes, an example might be taken from some of the smaller "copper-bottomed" vessels of H.M. Navy which were fitted with bronze shafts, and he understood with satisfactory results. Of course the cost would be heavy, but the excess cost of a hollow bronze shaft over a steel one would probably be no more than of bronze propeller blades over steel ones, and the former seemed to be worth the money spent on them. He had no doubt also that

Mr Hector Mollison.

if desired the manufacturers would undertake to give good sound castings of as great tensile strength as steel.

Mr E. Hall-Brown (Member) thought they were pretty well conversant with the fact that tail-shafts broke. In the proceedings of kindred institutions there were innumerable examples of broken tail-shafts; but engineers did not seem to agree as to what the causes of these breakages were. He presumed that the object of Mr M'Arthur was to arrive at the causes of these failures. At any rate that was the idea that gave him a considerable amount of interest in the paper. Some time ago discussions regarding the cause of boiler explosions went through the same stage of development that discussions regarding the causes of failure of tail-shafts were going through now. Every boiler explosion was then considered to be a most mysterious affair, just as the breakages of tail-shafts were now considered by many engineers to be mysterious affairs. In considering the paper, the question came to be: Had Mr M'Arthur given a reasonable clue to the causes of these breakages? No doubt Mr M'Arthur had correctly attributed the greater number of accidents to tail-shafts to original weakness, due to the fact that they were too small in diameter for their work. It might be well to consider the forces enumerated in the paper as acting upon tail-shafts, with the intention of seeing if they were of the magnitude assumed and deduced, and if so, if they were sufficient to cause breakage. It was unfortunate that a start had to be made at the wrong end of the business altogether. The only data available was the size of the engines, from which might be estimated the power developed and therefore the power transmitted by the tail-shaft. This was the method adopted by Mr M'Arthur. Unfortunately other forces came into play, with which the engines had very little to do, and which could not be estimated. Mr M'Arthur had taken an instance which was, as far as he could judge, a typical tramp steamer. The weight given for the propeller (in water) seemed about right; but, when the author dealt with the propeller half-immersed, he did not seem to add anything for the half that was out of the water, which should have been done. It was rather a pity that Mr M'Arthur had not given a sketch, because it was difficult to follow the description given, and to know the exact points about which the moments were taken. For instance, the effective overhang of the propeller was stated to be 2 feet; by this he understood that the distance from the end of the bearing to the centre of gravity of the propeller was 2 feet. With a 12¾-inch shaft it might be so in cases where the blades were overhanging or "set back." It would be as extreme a case as one would likely meet with. Mr M'Arthur had pointed out, what he thought they all recognised now, namely, that the worst condition under which a tail-shaft worked was when the vessel was light and the propeller only partially immersed. Now-a-days some vessels were extremely light in ballast, the boss of the propeller being entirely out of the water. Mr M'Arthur took the case in which the boss was just immersed; he assumed that half of the indicated H.P. of the engine would be delivered as effective H.P. by the propeller, no deduction being seemingly made for engine loss. This seemed to be rather an over-estimate, as it was doubtful what the efficiency of the propeller would be under those conditions, probably much less than 50 per cent., while Mr M'Arthur's own estimate for the net H.P. at the engine was 80 per cent. of the I.H.P., so that the effective power delivered by the propeller would be less than ·8 of ·5 of the I.H.P. This correction would reduce the bending moment due to the thrust. On the other hand, he was inclined to think that the engine which developed 1600 I.H.P. with a loaded ship would probably develop more than 1250 I.H.P. when the vessel was light. As a matter of fact, upon looking roughly into the question he thought that the actual I.H.P. might easily be 30 per cent. more with the ship light; but there should be a greater deduction due to the inefficiency of the propeller. He was inclined to think that, allowing for a greater development of power than that given, and assuming a less efficiency of the propeller, the actual thrust would be only about two-thirds of that calculated

Mr E. Hall-Brown.

by Mr M'Arthur, and therefore the bending moment due to the thrust would be reduced from 33 foot-tons to about 22 foot-tons. A small increase in the bending moment due to the weight of the partially immersed propeller would also require to be made, as the weight was understated. Leaving these corrections in the meantime and taking Mr M'Arthur's figures, the stress produced by the combined bending and twisting moments was 6400 lbs. per square inch. It must, however, be remembered that this was for a shaft designed in accordance with Lloyd's old rule, now superseded. The shafts that were made a year ago might be subjected to a stress of 6400 lbs. per square inch. If so, the stress was higher than most engineers would knowingly subject a tail-shaft to, especially as Mr M'Arthur's calculations referred to smooth water conditions. The actual conditions were far less favourable, in fact it was difficult to imagine what the worst might be. He knew a case where the engines raced so badly that when the propeller struck the sea all the blades were stripped off close to the boss. The momentary stress under such circumstances must be enormous. Taking it all round, there was no question that the stresses given by Mr M'Arthur were considerably less than those frequently experienced in vessels crossing the Atlantic in ballast. A point had been raised regarding the acknowledged fact that the conditions under which marine engines worked were more severe than those of a few years ago. The ships building to-day were not like those built ten years ago, or even three years ago; but he was afraid that as engineers they would have to recognise the fact, and build engines to meet the new conditions. To require vessels always to be loaded or semi-loaded with water or other ballast was not a suggestion that should be made by engineers, who ought to be prepared to make tail-shafts that would drive ships across the Atlantic in any trim. Lloyd's and the British Corporation had recognised this, and had made an attempt to meet the case in their new rules. There was no doubt that, when a change was made from two-crank compound to triple-expansion engines, the reduction of tail-shafts then allowed

Mr E. Hall-Brown.

was ill advised, and there was no real reason for such a reduction being made.

Mr John Lockie (Member) remarked that it was said at the present day that marine engines were built with a margin of profit of 5 per cent. With diminishing profits he would say that the inducement to put inferior material and inferior workmanship into ships was very great, and he thought that when this question came to be investigated, it would be found that amongst the causes of the failure of shafts at sea a number were due to inferior material and inferior workmanship.

Mr MacColl said that in connection with the different materials from which these tail-shafts were forged, the space between the two liners in a steel shaft was marked in little irregular pits scattered over the shaft, a wrought iron shaft was pitted with longitudinal reeds, and in a mixed steel and iron scrap shaft the pitting was in serrated or zig-zag marks all over the space, which looked most dangerous.

Mr Sinclair Couper proposed that they should adjourn the discussion.

The President said he was afraid they could not, as the list was very full. He thought they must close the discussion; but before doing so he would give Mr Wedgwood an opportunity of speaking.

Mr A. D. Wedgwood (Member) had heard so many different opinions about shafts, that he felt rather diffident about saying anything at all. One speaker had put the cause of broken shafts down to bad material and bad workmanship, and, as a manufacturer, he must take exception to that. He believed that for the last twelve or fifteen years the supervision in all forges had been much better than formerly, due to the fact that Lloyd's and the British Corporation had appointed forging inspectors, who had stopped many bad practices, and introduced reforms into some works where such were much needed. He wished that they would go a step further, and stop the bad practice of allowing stock shafts to be turned down to an unreasonable extent (as mentioned

Mr A. D. Wedgwood.

by Mr M'Arthur); and no *iron* thrust-shaft should be permitted to be fitted in a steamer. Many thrust-shaft corrugations were 5 inches deep and upwards, which meant turning 10 inches or more off the outside diameter. No superintendent engineer would accept an iron tail-shaft if it had been turned down from 18 inches diameter to 10 inches diameter, even with the object of getting quick despatch, and yet every day the equivalent was being done with thrust-shafts by cutting out the corrugations. These should all be forged from *ingot* steel, and the diameter at the bottom of the corrugations made larger than the body of the shaft. The fact that shafts had been considerably increased by the Registration Societies was sufficient evidence that they were too light before. For the particular type of cargo boat which was now the fashion, the Registration Societies had not gone far enough yet with regard to the size of tail-end shafts. If shipowners continued their demand for hulls which were more like boxes than the old-fashioned form of ship, they would never be free from trouble unless the tail-shafts were made 25 per cent. larger in diameter than the intermediate shafts as now fixed by the new rules. No engineer would dream of fitting an overhung fly-wheel. Yet, if there was no way out of the difficulty, he would take good care to have an abnormally big shaft. Would this not equally apply to the propeller? As pointed out by Mr M'Arthur, the strains on a tail-shaft must be enormous when driving a big hulk through a heavy sea in ballast, with a propeller altogether out of proportion to the diameter of the shaft, and receiving the equivalent of forge hammer blows every time the vessel pitched. This condition of affairs was of itself sufficient to account for all the disastrous break-downs. In one of the most recent second-class cruisers ordered by the Admiralty, the specified diameter of the crank-shafts was 13¾ inches, and of the tail-end shafts 18 inches; both the crank-shafts and tail-end shafts were hollow. Some engineers for a number of years had tried light shafts, and they had just heard from Mr Stark's interesting remarks that he had made up his mind to have no more of them. In advocating

Mr A. D. Wedgwood.

a considerable increase for tail-end shafts some unkind friend might say that he was pushing the interest of his own trade, but he could assure his audience that it was distinctly to the advantage of the forge trade to have the repairs and renewals which had been crowded upon them for some years, due to the shafts being made too light. The evil would not be remedied until the Registration Societies further increased the diameters of tail-shafts for the particular form of vessel mentioned. The leading Steamship Companies, such as the Cunard, Castle, Union, Peninsular & Oriental, and the Allan and White Star, had not experienced much, if any trouble, from the failure of shafts. He would therefore recommend to owners of "tramp" steamers the desirability of re-fitting in their present vessels larger tail-end shafts with continuous liners. This would mean re-boring the stern frame and probably fitting a cast *steel* stern-tube to enable the larger shaft to be carried. It was the only way out of the difficulty, and it would afford a guarantee that future failure of shafts would be minimised.

The **President** said that Mr M'Arthur was not present, but he would have an opportunity of replying by letter, and he would ask the Secretary to convey to him a vote of thanks from the Institution for his interesting paper.

Correspondence.

Mr D. C. **Hamilton** (Member) agreed with the author on some points regarding the causes of failure with tail-shafts. He considered the sizes given for tail-shafts by the Board of Trade and Lloyd's Registry were far too small for all conditions of work. Both Societies gave them as a minimum, and he supposed shipowners took them as a standard. A shaft inherently weak from size, as Mr M'Arthur said, was undoubtedly aggravated in its weakness by an abnormally heavy propeller suspended too far from the after bearing, short brass liners, racing of engines, stern bush much worn, shafting out of line, and insufficient immersion of propeller. The greater portion of broken tail-shafts he had seen

Mr D. C. Hamilton.

had their weakness and failure explained from some of the above named causes, if it was not congenital. Unfortunately the science of Molecular Physics was not very well understood by shipowners, or their engineers. If it were, he was inclined to think tail-shafts would be made of ample strength and good design to withstand all ordinary stresses successfully for years, if kept in efficient repair. He had a very strong opinion that a legal light load-line was as much required for the safety of life as a deep load-line, more especially for vessels crossing the North Atlantic in ballast, and when hard ballast was found necessary—over and above the ordinary water-ballast in double bottoms—it should be so placed, according to the vessel, that her periods of roll would not be shortened. He would not recommend the use of linerless tail-shafts working on white metal for new steamers. After some years experience of them he had never yet managed to keep out the water for twelve months, and water seemed to be the greatest drawback. He was inclined to favour brass lined shafts, running on white metal, with the stern pipe filled up with tallow. Mr M'Arthur's examples of dimensions by Board of Trade, Lloyd's, and British Corporation rules were very interesting, and the results given by the British Corporation formula were certainly none too heavy for tail-shafts. The last paragraph of Mr M'Arthur's paper on thrust-shafts came rather near his own experience with two steamers having thrust-shafts of almost similar dimensions. If correct in his surmise, the two iron shafts had been replaced by shafts forged from cast steel ingots, and up to the present time had shown no signs of failure. In long vessels which hogged or sagged fully three inches, according to the conditions of cargo loading, considerable stresses were caused in the shafting, and where the thrust-block was long and securely fixed to the vessel the thrust-shaft came in for an undue share of such stresses, especially if the collars were of large diameter.

A. Scott Younger (Member) remarked that although the title of the paper was Marine Engine Shafting, about five-sixths of it was devoted to the consideration of the propeller shaft, but con-

Mr A. Scott Younger.

sidering the immense amount of trouble caused by this one item, he thought the members of the Institution would not be disposed to find fault with the paper on that account. As the author said, the importance of the subject was born out by the amount of attention recently directed to it, and additional interest had been excited by the advancement and gradual acceptance of new theories which explained the frequent failures of propeller shafts. This difficulty was of course by no means a new one, papers had been read twenty to thirty years ago dealing with this subject, and galvanic action was usually assigned as the chief reason for the local corrosion at the ends of the liners. Gradually the idea had grown up that this was quite inadequate to explain it, though all writers admitted that it was bound to have a certain influence. In a paper he had the honour of reading this year before the Institution of Naval Architects, it was shown how the action of the partially immersed propeller resulted in a substantial bending moment on the shaft, and that idea was again worked out by Mr M'Arthur. Mr M'Arthur's calculation, however, did not seem to him to be so general in character or so accurate. For example, he said nothing regarding the stress in the shaft at the forward end of the after liner, and he was sure those whose business it was to survey propeller shafts would agree that as many shafts were condemned owing to local corrosion at this point, as for corrosion at the after end of the liner. The method of calculating the bending moment in his paper showed that there was quite as great a stress at the one point as at the other, and he considered it a defect in the author's method that no reference at all was made to this. The illustrations on page 64 showed the character of the bending moment, and consequent stress in a propeller shaft, neglecting the effect of the twisting moment which gave practically a constant stress throughout its length in addition to that shown. Fig. 2 showed bending moments on a propeller shaft; Fig. 3 variation of stress in tons per square inch. This point was really important as the experience obtained by actual shafts was confirmed by some model experiments which he had carried out, and in which the

Mr A. Scott Younger.

model shafts broke at the point corresponding to the inner end of the after liner, proving that the liners were actually a source of weakness in that they localized the stresses and induced corrosive action. Mr M'Arthur hardly appeared to appreciate the fact that even with the propeller immersed there would still be a bending moment in the shaft due to the thrust acting at a point below the centre, and this action of course was immensely intensified by partial immersion. There seemed to be a general agreement among naval architects and engineers that the more frequent failures of recent years were due to the increased size of steamers of light draught with small engines and large propellers, and especially to the fact that these boats made long runs with a quite inadequate

Fig. 2.

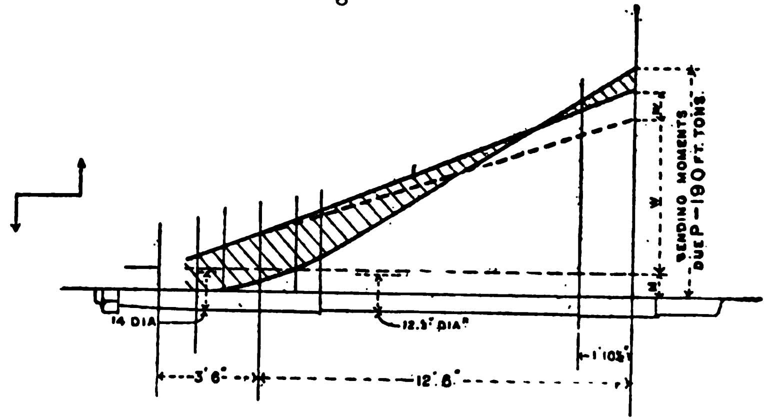

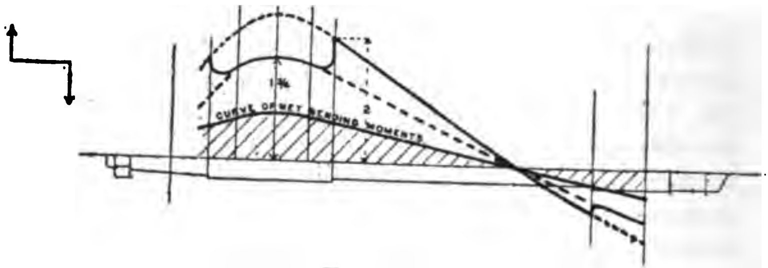

Fig. 3.

Mr A. Scott Younger.

amount of water-ballast which gave only a partial immersion of the propeller. Passing now to the consideration of the remedy for these defects, Mr M'Arthur, like most engineers, dismissed too lightly the advantages of outer bearings. Certainly as fitted in old times they were worse than useless, and if they were reintroduced the design would require to be radically altered. Nowadays naval architects recognised that the rudder post was not too well adapted for its work, so that when it was made to support the shaft as well as to do its ordinary duty it was little wonder that trouble ensued. He felt sure there were naval architects in this district who could design an outer bearing for either single- or twin-screw steamers, provided prejudices in favour of old established practice were laid aside and the problem approached with an open mind. If this were done, the tail shaft problem would, he thought, be solved. Failing this, there was the other alternative of increasing the size of the shaft—a step which had recently been taken up by the Registration Societies, and which would, no doubt, greatly improve matters. In this connection he agreed with Mr M'Arthur that the British Corporation had taken the right course in making the size of the shaft depend to some extent on the fulness of the ship and the diameter of the propeller. Regarding the material, he considered that a good ingot steel shaft would give greater satisfaction than one made of scrap iron or steel, as it was almost impossible in the first place to get the latter materials clean and pure, and again the method of manufacture opened the way for defective workmanship.

Mr J. Bruhn (Member) observed that Mr M'Arthur raised the question as to whether the ship or the shaft was to blame for the difficulties with tail shafts. No doubt a light condition of the ship tended to throw additional stresses on the tail-shaft, but the coefficient of displacement was surely not an important factor in this respect. If a full formed vessel, provided with deep ballast tanks, were lying deeper in the water than a finer vessel, then there was no reason to suppose the stresses on the shaft were higher in the former case than in the latter. The im-

Mr J. Bruhn.

mersion must be the most important element as far as the ship was concerned, and, with the present practice of fitting deep ballast tanks, it was independent of the coefficient of displacement. The immersion was nót, however, the only element of the ship affecting the stresses on the tail-shaft. The pitching of the vessel would affect the bending moment due to the overhang of the propeller. The change in the direction of motion caused reactions which would have to be alternately added to and deducted from the weight of the propeller, to get the resultant force.

Let R be the reaction of the propeller, then—

$$R = m\,l\,\frac{4\,\pi^2}{T^2}\,a \sin 2\,\pi\,\frac{t}{T}\,;$$

where m = mass of propeller,

l = distance between centre of gravity of ship and centre of gravity of propeller,

T = full or double period of pitching,

a = maximum pitching angle,

t = time lapsed between ship being in the horizontal position, and in the position under consideration.

This would be a maximum when $t = \frac{T}{4}$, or when the end of the vessel was at the highest and lowest positions.

Let W be the weight of the propeller, then—

$$R = \frac{W}{g}\,l\,\frac{4\,\pi^2}{T^2}\,a$$

If $l = 260$ feet, $g = 32{\cdot}2$, $T = 5$ seconds, and $a = \frac{1}{10}$ min.

$$R = W\,\frac{260 \times 4\,\pi^2}{32{\cdot}2 \times 25 \times 10} = 1{\cdot}28\ W,$$

which showed that, in cases of excessively violent pitching, the reaction might even exceed the weight, and the bending moment on the shaft, due to the weight, might therefore be more than doubled. The values of T and a would probably never be so high as assumed above in a vessel of such length, but they served to illustrate the case. The above actions were those due to the momentum of the propeller. It might be of interest to see what those due to the change of the direction of the moment of momentum would be under the same conditions. This cause of stress was mentioned in the discussion on Mr Matthey's paper on "The Mechanics of the Centrifugal Machine," read in 1899, but he (Mr Bruhn) had not seen an actual case examined before. The propeller would act as a gyrostat, and the vessel would, when pitching, continually change the direction of the axis of the shaft, and, therefore, of the moment of momentum of the propeller. This would cause a horizontal couple to be applied to the tail-shaft.

Let this couple be C, and let m be the mass of the propeller, r the radius of gyration of the propeller, w_1 the angular velocity of the propeller, and w the angular velocity of the pitching vessel, then—

$$C = m r^2 w_1 w.$$

Let W be the weight of the propeller, n the number of revolutions of the propeller per minute, and g the acceleration of gravity, then—

$$C = \frac{W r^2}{g} \frac{2 \pi n}{60} w$$

$$\text{But } w = \frac{2 \pi}{T} a \cos. 2 \pi \frac{t}{T},$$

where a, T and t have the same meaning as above. From this it would be seen that w would be a maximum when $t = o$, or when the vessel was in the horizontal position. The maximum angular velocity of the vessel was, therefore—

$$w = \frac{2 \pi}{T} a,$$

$$\text{and } C = \frac{W r^2}{g} \frac{2 \pi n}{60} \times \frac{2 \pi a}{T}$$

Mr J. Bruhn.

Let $W = 22$ tons, $r = 3{\cdot}24$ feet, $g = 32{\cdot}2$ feet, $n = 81$, $a = \frac{1}{10}$ and $T = 5$, then

$$C = \frac{4\,\pi^2 \times 22 \times 3{\cdot}24^2 \times 81 \times 12}{60 \times 32{\cdot}2 \times 5 \times 10} \text{ inch-tons}$$

$$= 91{\cdot}5 \text{ inch-tons}$$

Let the diameter of the shaft be $20\frac{1}{4}$ inches. The moment of resistance against bending would then be $\cdot 098 \times 20{\cdot}25^3 = 820$. If p represented the stress per square inch caused by the couple C, then—

$$p = \frac{91{\cdot}5}{820} = \cdot 11 \text{ tons per square inch.}$$

It would, therefore, be seen that the stress caused by the change in the direction of the moment of momentum was insignificant, even when the pitching was excessive. Moreover, as the couple would tend to throw the propeller to the port side when the after end of the vessel was descending (in the case of a right-handed screw), and to starboard when the after end was ascending, then it would be seen that the couple would always be directly opposed to the horizontal couple which the reaction of the water would produce when the propeller was forced vertically through the water. The gyrostatic couple would probably be more than balanced by the reaction couple. The latter, however, afforded an easy way of remembering the direction in which the former acted. With respect to the last question in Mr M'Arthur's paper, as to what the stress would be on a shaft 14 inches in diameter with a 12-inch slit through the direction of the axis, it would probably not be far wrong to assume the case to be one of pure bending and shearing, the two semi-circular parts forming beams 12 inches long. Let the total shearing force on one of the semi-circular parts be F. With the intensity of the shear being greater near the middle of the sections, it followed that F would not be applied exactly at the centre of gravity of the semi-circular sections, but at a distance of $\cdot 23\,D$ from the centre of the shaft; where D was the diameter of the shaft. Let T be the twisting moment and q the stress caused in the unwounded shaft, then—

$$q = \frac{T}{\cdot 196\,D^3}$$

The shearing force on one semi-circular section in way of the slit was—

$$F = \frac{T}{\cdot 46\,D}$$

The stress at the middle of the semi-circular section was—

$$q_1 = \frac{F m}{b I},$$

where m was the moment of the half of the section about the half-diameter b, and I the moment of inertia of the section, hence—

$$q_1 = \frac{F\left(\frac{D^3}{24}\right)}{\left(\frac{D}{2}\right) \times \cdot 0245\ D^4} = \frac{F}{\cdot 294\,D^2}$$

$$= \frac{T}{\cdot 46 \times \cdot 294\,D^3} = \frac{T}{\cdot 135\,D^3} = 1\cdot 45\,q$$

The shearing stress on the shaft would therefore be increased by about 45 per cent. by the slit.

The semi-circular parts would bend as a beam contrarily

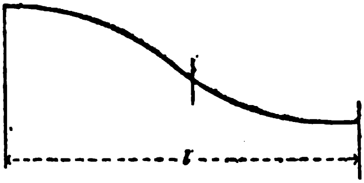

Fig. 4.

at the two ends, and if l was the length of the slit, then the bending moment at each end would be—

$$M = \frac{F\,l}{2} = \frac{T}{\cdot 46\,D^2} \times \frac{l}{2}$$

Mr J. Bruhn.

The moment of resistance to bending for each section $= \cdot049\,D^3$. The stress might be called p where—

$$p = \frac{M}{\cdot049\,D^3} = \frac{T\,l}{\cdot92\,D \times \cdot049\,D^3} = \frac{T}{\left(\frac{D}{l}\right) \times \cdot045\,D^3}.$$

In the case referred to

$$\frac{D}{l} = \frac{14}{12} = 1\cdot17$$

and

$$P = \frac{T}{\cdot052\,D^3} = 3\cdot77\,q.$$

The direct stresses on the semi-circular parts were therefore about 3¾ times greater than the shearing stresses on the unwounded shaft.

Mr M'Arthur, in reply, wrote that he regretted his inability to be present at the discussion. It was with considerable diffidence that he consented to add to the existing literature on this subject; but, after reading the interesting discussion that had followed upon his paper, he had no reason to be sorry for having done so. Mr Stark instanced a shaft 12 inches in diameter, with a propeller weighing 8½ tons, overhung about 7 inches. If this propeller had a boss 2 feet 8 inches long, according to usual proportions, it was difficult to see how the overhang could be only 7 inches. If the blades were assumed to be normal to the axis, so that the centre of gravity of the propeller might be taken at the centre of the boss, the minimum overhang would be 1 foot 4 inches. If the distance from the face of the boss to the end of the lignum vitæ were as small as 3 inches, the overhang would amount to 1 foot 7 inches. With an 8½-ton propeller this would give a bending moment of 13·46 foot tons, to which would be added the bending effect of the thrust; this, as Mr Younger pointed out, acted at a point below the centre of the shaft even when the propeller was fully immersed. An 8½-ton propeller was of itself a heavy load on a 12-inch shaft, and it was probable that these shafts would have

Mr M'Arthur.

stood longer had the propeller been replaced by a solid one of, say, 6 tons. Mr MacColl's sketch of an outer bearing was very interesting, more particularly as it was an example of successful practice. By adopting an arrangement of that description, the bending stresses would be much reduced, and the life of the shaft correspondingly lengthened. A really efficient outer bearing was one of the methods by which the tail-shaft trouble could be cured. Mr Cleghorn's account of the results of his calculations of turning efforts was confirmatory of the argument against the reduction in size allowed in favour of triple engines; and Mr Mollison's remarks also pointed in the same direction. Mr Cleghorn drew attention to a matter in connection with the use of continuous liners, which led to the belief that too high a premium was given to their adoption by Lloyd's, particularly as it was not specified that they should grip the shaft from end to end. Mr Mollison's suggestion that two shafts should be used alternately had at least this recommendation, that it could easily be carried out; but it was to be feared that shipowners would not take very kindly to a proposal to fit bronze shafts. Exception had been taken by Mr Hall-Brown to some of the figures used in determining the stresses in the propeller shaft. In the calculations, the weight of the propeller was taken as 6 tons in water, and for strict accuracy an allowance should have been made for the portion of two blades above water when the boss was just covered. The overhang of 2 feet might be as much as would likely be found, but on the other hand the weight of the propeller might easily have been more, and might be compared with Mr Stark's 8½-ton propeller on a 12-inch shaft, and a 9-ton propeller on a 13-inch shaft. The bending moment in either of these cases would exceed that adopted. In estimating the thrust, the combined efficiency of engine and propeller was taken at ·5. Taking the net H.P. at ·8 of the I.H.P., this would give a propeller efficiency of ·625, which might be considered a little over the mark, but as Mr Hall-Brown pointed out, it was pretty much a matter of guess-work, and the author was not inclined to admit that the moment was over-estimated to the

Mr M'Arthur.

extent of one-third. Mr Hall-Brown's remark, that engineers should be prepared to make tail-shafts to drive ships across the Atlantic in any trim, and presumably in any weather, was a little wide of the mark. A light load-line was advocated for the sake of general seaworthiness and safety, not for the sake of tail-shafts, although a direct benefit would accrue to them from deeper immersion. It was satisfactory to note such strong expressions of opinion regarding the necessity for a light load-line as those of Mr MacColl and Mr Hamilton. In connection with thrust shafts the latter mentioned that two iron shafts which had cracked were replaced by others forged from ingot steel, with the result that no further trouble had been experienced. This bore out the opinion expressed by Mr Wedgwood on the same subject. Mr Younger also advocated the use of ingot steel for tail-shafts, and reference was made by Mr Manuel, during the discussion on a paper on shafting read before the Institute of Marine Engineers lately, to the immunity from breakages enjoyed by the Peninsular and Oriental Company since the adoption of that metal. It was due to the tramp steamship owner, and perhaps also to the forge-master, to say that a great number of broken and condemned shafts would have had a longer life on board a steamer of the class which represented the greater portion of the tonnage of the Peninsular and Oriental, Cunard, Castle, and other mail lines; for all shafting, even when of the same relative strength with respect to H.P. transmitted, had to stand far rougher usage and more severe stresses in cargo steamers than in those of the latter class, where the draught did not vary to nearly the same extent. Mr Younger pointed out that no mention had been made in the paper of the stress which existed at the forward end of the after liner. In Mr Younger's paper, read before the Institution of Naval Architects, which he recently had the pleasure of reading, Mr Younger went into the calculation of those stresses very fully, and perhaps by a more accurate method than that made use of in his paper. The exact nature and amount of the stresses in a propeller shaft were, it need hardly be said, very difficult, if not impossible to estimate.

Mr M'Arthur.

Mr Bruhn gave an expression for the reaction set up by the pitching of the vessel, which, as he showed by the example worked out, might be as much as 1·28 times the weight of the propeller. His results were, however, apparently based on the assumption that the propeller was oscillating in air, so that its reaction would have a greatly different value from that given by the formula during the portion of the oscillation when any part of it was under water: also, while the propeller was out of the water the thrust, and consequently the bending moment due to it, would be *nil*. There would also be induced under these circumstances a torsional vibration in the entire length of shafting, due to the varying resistance to turning; the lower limit being reached when the propeller was in air, and the higher when it entered the water, the inertia of which might cause a shock sufficient to snap the blades. With regard to the co-efficient of displacement, it was a factor in respect of stresses in the tail-shaft, only so far as it affected the draught. If a minimum statutory draught were fixed, it would not matter whether a ship's lines were fine or full; till that was done, or an efficient outer bearing fitted so that the propeller was not overhung, the co-efficient of displacement ought to be taken into account along with the diameter of the propeller in determining the size of shaft. His thanks were due to Mr Bruhn for the interesting solution of the question regarding the stress in a cracked shaft; and also to those members who had taken part in the discussion, for their favourable criticisms. He regretted that time should have prevented other members who wished to speak from expressing their views.

ROLLING OF SHIPS AND THE EFFECT OF WATER-BALLAST.

By Mr BERNARD C. LAWS (Member).

Held as read 20th November, 1900.

HITHERTO water-ballast seems to have commanded but little attention, either on the part of the shipowner or the naval architect, beyond supplying a vessel with a good capacity for carrying it. Certainly its position in the ship has (with perhaps a few exceptions where its importance has forcibly asserted itself) apparently been of somewhat secondary consideration. Questions arise, therefore, not only regarding the reasons for assigning to the water-ballast the position which it almost invariably occupies in the vessel, but, if this position be not the best, how it may be modified so as to produce the necessary good qualities of the vessel when she may be compelled to resort to the use of her tanks.

There are, admittedly, good reasons which greatly favour the old established disposition; at the same time there are other weighty arguments which may be brought to bear, to prove not only that it is not the most advantageous, but that others may be specified calculated to produce far better effect at sea in that condition of the vessel in which she may be compelled to utilise her water-ballast.

The great advantage of placing the water-ballast immediately above the bottom of the vessel is, that, by so doing, an inner water-tight bottom is provided, by which the safety of the ship is greatly insured in the event of grounding or otherwise meeting with accident. With this is also accompanied the advantage of increased strength to the structure, considered as a girder, in resisting strains tending to produce bending in a longitudinal direction. Great as these advantages are, however, other good and salient qualities are, by their adoption, sacrificed in consequence, in the case of certain vessels which, from the nature of their service, have often to proceed to sea under conditions the least calculated to lend themselves to safety.

Until recently, ships were seldom found to proceed to sea without a cargo on board. Due to the ever changing aspects of trade, however, vessels now, after discharging their freight, have often to return to port without reloading. In such cases many dangers must be encountered in the event of meeting with rough weather. Then water-ballast comes to the aid of the ship master, by which he may increase the displacement of the vessel, and trim her so far as he is able to suit his requirements.

So far as displacement is concerned the ballast may be placed anywhere in the vessel with the same result, but by a judicious distribution fore and aft, a suitable trim may also be obtained. The safety of the vessel, however, on the one hand, and the comfort of the passengers and the crew on the other, are measured by the condition of the vessel as regards stability, conjointly with the distribution of the weights which go to make up her displacement. The position usually assigned to water-ballast is not such as to lend itself to the good behaviour of the vessel at sea; since not only does it considerably diminish the height of the centre of gravity above the keel, thus increasing largely the stability, but at the same time being situated at a position far removed from the axis of rotation, it has, due to its inertia, a great influence on the rolling motion of the vessel.

Heavy and uneasy rolling brings strains to bear on the structure, to say nothing of discomfort to passengers and probable injury to the machinery. Apart from injury to the structure, which must of necessity accompany heavy rolling, the dread entertained by passengers and possible bodily harm to living freight, are sufficient reasons for the naval architect concentrating his abilities in the design of a vessel best calculated to meet most of the demands for comfort of the human element, and to aim at reducing straining action to a minimum. Rolling in some cases has reached such extremes that passengers have had to be strapped into their berths to prevent being thrown to the deck; and in the case of cattle carrying vessels, contagious disease contracted by the animals has been traced to excessive rolling. Many instances may be cited wherein a design productive of easy motion would be considered a boon to those who have to go down to the sea in ships.

When a vessel is rolling, the instantaneous axis about which oscillation takes place varies from moment to moment, but for small angles of inclination it is practically correct to assume the axis to pass longitudinally through the centre of gravity of the vessel. With an unresisting medium or fluid the period of oscillation may be readily obtained; but with a resisting fluid the angle and period will in consequence be modified. The period of oscillation with an unresisting fluid is given by the general formula—

$$T = \pi \kappa \sqrt{\frac{1}{g\,\mathrm{GM}}} \left\{ 1 + \left|\frac{1}{2}\right|^2 \mathrm{Sin}^2 \frac{\alpha}{2} + \left|\frac{1 \cdot 3}{2 \cdot 4}\right|^2 \mathrm{Sin}^4 \frac{\alpha}{2} + \left|\frac{1 \cdot 3 \cdot 5}{2 \cdot 4 \cdot 6}\right|^2 \mathrm{Sin}^6 \frac{\alpha}{2} + \right\}$$

where α is the angle through which the vessel turns,
,, κ the radius of gyration of the vessel relative to the axis of rotation,
,, GM the metacentric height,
,, g the value of the force of gravity at the place of observation, and
,, $\pi = 3{\cdot}14159$.

If, now, α be considered small, the above formula becomes

$$T = \pi \kappa \sqrt{\frac{1}{g\,\mathrm{GM}}}$$

= period of roll from one side of the upright to the other.

Fig. 5 (Appendix I.) shows the variation in time of roll for angles ranging from 0° to 50°

where $T = \pi \kappa \sqrt{\frac{1}{g\,\mathrm{GM}}}$ is taken = 10 seconds.

From this diagram it will be seen that the period, as ordinarily calculated by the above formula, is practically the same for angles ranging from 0° to 15° on either side of the position, *i.e.* within the limits for which the metacentric method of stability applies.

The formula shows that—

(1) Period is increased by increasing κ, *i.e.* by moving weights already on board away from the common centre of gravity of the ship, and *vice versa.*

(2) Period is increased as metacentric height is diminished, and *vice versa.*

This formula overthrows what has been a popular belief, viz., that a vessel when rolling may be likened to a simple pendulum suspended at the metacentre M, the whole weight being concentrated at the centre of gravity of the vessel. If this were so, we should have—by the formula used for calculating the period of oscillation of the simple pendulum, viz.,

$$T = \pi \sqrt{\frac{GM}{g}},$$

—the period increased by an increase of GM and *vice versa,* which is at once contrary to what has been proved above and what has been found by experience. So far as the influence of κ on the period is concerned, it has been seen, with regard to weights already on board, that either winging them or in any way moving them out from the centre of gravity of the vessel augments the value of κ, and consequently increases the period. The effect, however, of placing weights on board may be such as to increase, diminish, or produce no alteration in, the value of κ according to the distance at which these weights are placed relative to the centre of gravity.

This may be shown thus:—

If M be the mass, κ the radius of gyration about an axis through the centre of gravity of the vessel, and m be the mass of a body placed on board at a distance r from the centre of gravity, then the resulting radius of gyration will be greater than, equal to, or less than, the original, according as

$$\frac{M\kappa^2+mr^2}{M+m} \text{ is} > = \text{or} < \kappa^2,$$

$$i.e., \ r > = \text{or} < \kappa,$$

or according as r is greater than, equal to, or less than, the original radius of gyration.

Now, considering the other variable, viz., MG, we have:—

(*a*) If weights already on board be shifted horizontally, the metacentric height is not altered in value. For the same reason, if weights be placed on board at the same height above base as the centre of gravity, the metacentric height is not practically altered in value, except in so far as the position of M is changed due to the deeper immersion of the vessel. Consequently, there is practically no change in the period of oscillation.

(*b*) If, however, the position of these weights be either above or below the centre of gravity of the vessel, then the value of GM will be modified accordingly, and consequently the period T.

Generally, in either case—*a* or *b*—there is an alteration in the position of the centre of gravity, and therefore of the axis of rotation, so that both κ and MG are modified thereby.

Hence, in determining T, the effect of the weight, both on κ and MG, must be considered conjointly. For this purpose, the effect on the period of oscillation of a vessel is determined by—

(*a*) Shifting weight already on board.
(*b*) Placing weight on board.

These cases are generally considered in the appendices II. and III., and a specific vessel of 8000 tons is taken in appendices IIa. and IIIa., where the results are based on the assumption that the period of oscillation is the same for moderate angles of roll within the limit for which the metacetric method of stability applies.

In the first case it will be seen that moving a weight vertically upwards or horizontally produces a better effect than a downward movement, by increasing the time of oscillation; and the vertical movement in this respect produces much the best effect. In the second case, the position of the weights above the centre of gravity produces by far the best effect by augmenting the period. Of course this will only hold within certain limits, *i.e.*, a vertical position may be reached at which if the weight were concentrated the result would be the best possible, and this position may in the case of each design be determined.

Generally, whatever the change of disposition of the weights may be, both κ and MG are altered, and the effect on the period and velocity of oscillation is such that GM has the greater influence. This is the case with vessels which have to resort to their double bottom tanks. A better effect (due to the value of GM being little modified), is produced by winging the weights, than that which holds in the case of double bottom tanks; but undoubtedly —as demonstrated by the principle of the two cases cited above— the best effect is obtained by giving the weights a central and higher position relative to the centre of gravity of the vessel. This partly follows from the well-known principles of rigid dynamics where the moment of the accelerating forces involves the product of weight, and the square of the distance of the same from the axis of rotation, so that for a rigid body turning about an axis, the moment of accelerating force at any instant

$$= \mathrm{C} \frac{d^2 a}{dt^2} wk^2,$$

where $\frac{d^2 a}{dt^2}$ = rate of change of angular velocity, and k the radius of gyration about the said axis.

All this demonstrates that wing tanks are far better than double bottom tanks, and again that vertical central tanks are still superior to wing tanks in bringing about the desirable qualities of a vessel at sea.

The above results show generally the effect of the disposition of weight on the period of oscillation only for a specified angle of roll, without any reference to the angle to which a vessel in a given condition is likely to incline. The angle will of course depend on the external force tending to turn the vessel from her upright position, in other words, on the resultant moment of the inclining forces. This of course is indeterminable through lack of knowledge of the conditions of weather likely to be encountered; and all that may be done is to assume a complete inclining force and examine what may be its effect on the angle of inclination, by means of the curve of statical stability. Let the moment of the resultant inclining force be M, and let the curve of statical stability be constructed with righting moments—in lieu of righting arms—as ordinates. Then if the force be of an impulsive nature, and of moment = M say, the angle reached would be represented by *og*,

Fig. 1

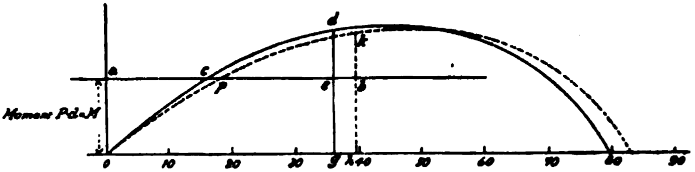

where the area of the portion of the curve *cde* is equal to area *oac*. If, however, the curve had taken the form shown by the broken line, Fig. 1, then *oh* would have been the angle reached, where area *pkb* is equal to area *oap*. From this it will be seen that the angle of inclination will depend on the rate at which the stability curve rises from the origin *o*, in other words on the metacentric height. The great difficulty which the designer—as well as the ship master—has to contend with is the effect of waves on rolling motion; and even with vessels designed to run between certain ports, and to encounter weather of a definite character, the results obtained are sometimes very far from what might have been expected from the designer's point of view. Even bilge-keels may be of little service in preventing heavy rolling in the case of a vessel meeting with waves having a period corresponding with her own period of motion; and cases are known where, due to the specific nature of the ocean swell, vessels at anchor have been compelled to stand out to sea in order to obviate the dangers consequent on the heavy rolling set up.

Undoubtedly the gravest condition in which a vessel may be in, is when she has to resort to her tanks in order to obtain not only sufficient displacement, but also to acquire sufficient stern trim necessary to develop the maximum power of the propellers.

A vessel in the light or ballast condition necessarily exposes a large surface to the action of wind and waves, with the result that, being unable to stand up against these opposing forces, she is often found to have deviated considerably from her course, thus entailing considerable monetary loss to her owners in virtue of the delay. This is particularly the case with the ocean tramp of small engine power and comparatively small displacement when in the ballast condition, and it is due to the insufficient *vis viva* or kinetic energy of the ship as compared with the resistance of the opposing forces on the large exposed surface of the vessel, together with other causes already cited.

In designing a cargo vessel, fulness of form is resorted to, and beam is increased relative to depth, in order to obtain the greatest possible capacity consistent with economy of propulsion. Fulness of form is productive of greater stability, due to the greater increase of moment of inertia of the water plane area relative to displacement, than obtains in ships of fine form. This has an influence detrimental to steady motion in the light condition, and the motion is rendered more uneasy when the water in the ballast tanks forms the principal deadweight of the vessel.

It, then, becomes the special duty of the designer to so arrange the ballast tanks that their volume and position may be such as to give a suitable draught and trim, and steadiness to the vessel.

In some instances the space designed for cargo stowage is utilised—by a little extra strengthening—for water-ballast, so that at least one of the evils, viz., small displacement, is obviated. Generally, however, in these cases, the ballast is too concentrated. This has been proved on actual service, and is obvious from theoretical considerations.

Consider a vessel where two of the holds before and abaft the engine and boiler room may be used for carrying water, Fig. 2. This is a parallel case with that of a beam or rod having heavy parts concentrated at points *b*, *d*, and *f* along its length, Fig. 3. This beam is ill-formed to withstand strains tending to turn it either in one direction or the other about an axis through its centre of gravity, being essentially weak at the points where break of continuity occurs; the weakness may only be obviated by considerable extra strengthening at those parts. Had, however, the weights been better distributed, as shown by Fig. 4, a stronger beam, better able to withstand the racking strains, would have resulted.

Fig. 2.
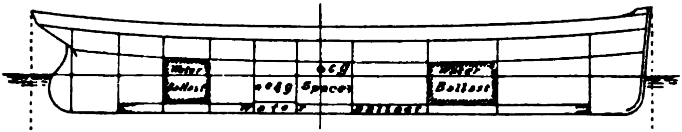
Fig. 3.

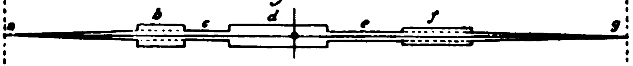

Fig. 4.

Applying these arguments to the case of the above vessel, by distributing the ballast fore and aft somewhat uniformly, she would be less strained by the action of external forces, tending to turn her about either a vertical axis, or a horizontal longitudinal axis through the centre of gravity.

Of course ballast uniformly distributed in this way lends no help to the structure in the sense of strengthening the same from the girder point of view, but only in the sense that cargo well distributed tends to lend support as well as to engender better behaviour of the vessel than if it were concentrated in one or more holds, the remaining holds being empty. This advantage would be obtained without in the least destroying the good results accompanying the construction of hold deep tanks, and would reach a maximum by a judicious design of central hold deep tanks extending fore and aft on either side of the engine and boiler space.

If such tanks were invariably used for water-ballast then the diminished cargo capacity would, undoubtedly, from an owner's point of view, be a very important factor for consideration, but the pecuniary loss entailed thereby would be lessened somewhat through reduced dues brought about by the decreased register tonnage of the vessel. The only real objection however would be that the space, when required for cargo, would have to be thoroughly dried before it could be utilised. This could be easily overcome by an arrangement for sending a blast of hot air into the compartment, manipulated from the boiler room, at a little extra expense in the first cost of the vessel.

There is however one other objection with regard to the extra weight and cost entailed in making these compartments water-tight, due to the extra necessary strengthening in order that the bulkheads may withstand the water pressure.

All these objections may, if not entirely, be largely overcome in a well-designed vessel; and as a result there would accrue all the advantages of endurance of the structure, to say nothing of comfort to the living freight and time saved in the passage between ports.

Finally, the arguments set out above with regard to cargo-carrying vessels apply equally to the design of vessels in general. In all cases an immoderate amount of initial stability is detrimental to the good behaviour of the vessel at sea.

In disposing of the weights which go to make up the complete ship, it is therefore necessary to so place them as to produce an amount of stability which experience teaches is the best to be adopted for the particular kind of vessel under consideration. At the same time they should be so distributed as to have a tendency—as far as the requirements of the design will allow—the least calculated to produce excessive rolling due to their inertia. The initial stability in the sea-going condition is of course dependent on that given to the vessel in the light condition—with hull, engines and boilers—and this latter is the condition which of necessity must regulate the performance of the vessel in all future sea-going conditions of loading.

In yachts and war vessels, where weights placed on board remain permanently in the same positions, the least difficulty is experienced in arranging a suitable GM. But with vessels employed in passenger and cargo service, or in cargo service alone, the designer has to contend with all the variations of position of centre of gravity likely to accrue from the variable stowage of the different types of cargo carried. It is found generally that vessels of the latter class prove more comfortable when a moderate value is assigned to the GM in the light condition, and this has been found to be so even where this condition has been accompanied by a negative GM. This is explained by the fact that the particular method of loading—together with the bunker coal and stores carried—produce in the final loaded ship a moderate GM at once productive of steadier motion.

APPENDIX I.

Curves showing variation of period of oscillation with angle of roll.

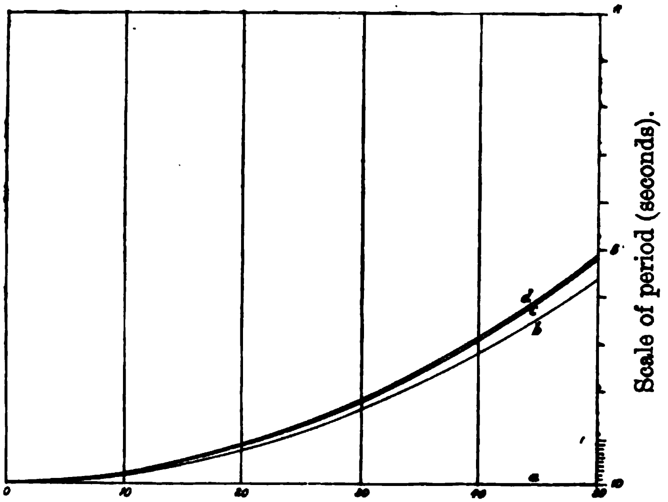

Scale of angles of heel (degrees).

Note.—Curves *a*, *b*, *c* and *d* are formed by including 1, 2, 3 and 4 terms of the general formula respectively.

APPENDIX II.

Let W = total displacement of ship, and $T = \pi\kappa\sqrt{\frac{1}{g\,d}}$.

where T = natural period of oscillation, κ = radius of gyration, and GM = *d*, the metacentric height.

Let *w* = a weight originally at C.G. of vessel, and moved out through a distance *x* feet.

(1) Let *w* be moved horizontally.

Horizontal displacement of C.G. $= \frac{w\,x}{W}$. GM remains unchanged, and = *d*.

$$(\text{New rad. gyration})^2 = \frac{1}{W}\left(W\kappa^2 + wx^2\right) = \kappa^2 + \frac{wx^2}{W} \text{ nearly.}$$

$$(\text{New period})^2 = \frac{\pi^2\kappa^2}{gd}\left(1 + \frac{wx^2}{W\kappa^2}\right)$$

$$\text{Or new period} = T\sqrt{\left\{1 + \frac{wx^2}{W\kappa^2}\right\}},\ \textit{i.e.}\ > T.$$

(2) Let w be moved vertically upwards

$$\text{New value of GM} = d - \frac{wx}{W}.$$

$$(\text{New rad. gyration})^2 = \kappa^2 + \frac{wx^2}{W}\ \text{nearly.}$$

$$(\text{New period})^2 = \frac{\pi^2\kappa^2}{gd}\left(W + \frac{wx^2}{\kappa^2}\right)\frac{d}{Wd - wx}.$$

$$\text{Or new period} = T\sqrt{\left\{W + \frac{wx^2}{\kappa^2}\right\}\left\{\frac{d}{Wd - wx}\right\}}.$$

i.e., new period is $> = \text{or} < T$ according as

$$\sqrt{\left\{W + \frac{wx^2}{\kappa^2}\right\}\left\{\frac{d}{Wd - wx}\right\}}\ \text{is} > = \text{or} < 1.$$

i.e., according as $\sqrt{\left\{\dfrac{W\kappa^2 d + wx^2 d}{W\kappa^2 d - wx\kappa^2}\right\}}$ is $> = \text{or} < 1$.

Now this position is always > 1; hence new period is $> T$.

(3) Let w be moved vertically downwards.

$$\text{New value of GM} = d + \frac{wx}{W}.$$

$$(\text{New rad. gyration})^2 = x^2 + \frac{wx^2}{W}\ \text{nearly.}$$

$$(\text{New period})^2 = \frac{\pi^2\kappa^2}{gd}\left(\frac{W\kappa^2 + wx^2}{W}\right)\frac{Wd}{\kappa^2(dW + wx)} = T^2\left(\frac{W\kappa^2 d + wdx^2}{W\kappa^2 d + wx\kappa^2}\right)$$

i.e., new period is $> = \text{or} < T$ according as

$$\sqrt{\left\{\frac{W\kappa^2 d + wdx^2}{W\kappa^2 d + wx\kappa^2}\right\}}\ \text{is} > = \text{or} < 1.$$

i.e., according as dx is $> = \text{or} < \kappa^2$, or $x > = \text{or} < \dfrac{\kappa^2}{d}$,

which, since x would seldom, if ever, be $= \text{or} > \dfrac{\kappa^2}{d}$, would generally give new period $< T$.

APPENDIX IIa.

Consideration of a vessel where W = 8000 tons, initial GM = d = 2 ft., T = 10 seconds, w = 50 tons, x = 10 ft.,

$T = \pi\kappa\sqrt{\frac{1}{g\,\mathrm{GM}}}$ or $10 = 3\frac{1}{7}\,\kappa\sqrt{\frac{1}{32\times 2}}$, or $\kappa = 25{\cdot}45$ = original value of radius gyration.

First consider the weight (50 tons) already on board, and shifted as in Appendix II. Then:—

(1) $(\text{New rad. gyr.})^2 = \frac{1}{8000}\left(8000\times\overline{25{\cdot}45}|^2 + 50\times\overline{10}|^2\right) = \overline{25{\cdot}47}|^2.$

New period $= \frac{22}{7}\times 25{\cdot}47\sqrt{\frac{1}{2\times 32}} = 10{\cdot}006$ seconds.

(2) Vert. displac'm't of C.G. $= \frac{50\times 10}{8000} = \frac{1'}{16}$. New value GM $= 1\frac{15}{16}$ ft.

New period $= \frac{22}{7}\times 25{\cdot}47\sqrt{\frac{1}{1\frac{15}{16}\times 32}} = 10{\cdot}17$ seconds.

(3) New value of GM $= 2\frac{1}{16}$ ft.

New period $= \frac{22}{7}\times 25{\cdot}47\sqrt{\frac{1}{2\frac{1}{16}\times 32}} = 9{\cdot}86$ seconds.

Hence:—

(1) Horizontal shift of weight increases period of oscillation by ·06%
(2) Vertical ,, ,, upwards increases ,, ,, 1·7%
(3) ,, ,, ,, downwards decreases ,, ,, 1·4%

APPENDIX III.

Let a weight w be placed on board at a distance x from original C.G. of vessel:—

(1) Horizontally:—

Horizontal displacement of C.G. $= \frac{wx}{W+w}$. GM remains unchanged, and $= d$.

(New radius gyration)$^2 = \frac{1}{W+w}\left(W\kappa^2 + wx^2\right)$ nearly.

(New period)$^2 = \frac{\pi^2\kappa^2}{gd}\left(\frac{W\kappa^2+wx^2}{W\kappa^2+w\kappa^2}\right)$.

New period $= T\sqrt{\left\{\frac{W\kappa^2+wx^2}{W\kappa^2+w\kappa^2}\right\}}$.

Or new period is $>$ $=$ or $<$ T according as x is $>$ $=$ or $<$ κ. Hence, generally, new period would be $<$ T.

(2) Vertically above C.G.:—

New value of GM $= d - \frac{wx}{W+w}$.

(New rad. gyration)$^2 = \frac{1}{W+w}\left(W\kappa^2 + wx^2\right)$.

(New period)$^2 = \frac{\pi^2\kappa^2}{gd}\left(\frac{W\kappa^2 d+wx^2 d}{W\kappa^2 d+wd\kappa^2-wx\kappa^2}\right)$.

New period $= T\sqrt{\left\{\frac{W\kappa^2 d + wx^2 d}{W\kappa^2 d + wd\kappa^2 - wx\kappa^2}\right\}}$,

or new period $>$ $=$ or $<$ T according as $x^2 d$ is $>$ $=$ or $<$ $d\kappa^2 - x\kappa^2$, or according as d is $>$ $=$ or $<$ $\frac{\kappa^2}{x^2}(d-x)$. Now, if we consider that, generally, $d-x$ is negative; then new period is $>$ T.

(3) Vertically below C.G.:—

New value of GM $= d + \frac{wx}{W+w}$.

$$(\text{New rad. gyration})^2 = \frac{1}{W+w}\left(W\kappa^2 + wx^2\right).$$

$$(\text{New period})^2 = \frac{\pi^2\kappa^2}{gd}\left(\frac{W\kappa^2 d + wx^2 d}{Wd\kappa^2 + wd\kappa^2 + wx\kappa^2}\right).$$

$$\text{New period} = T\sqrt{\left\{\frac{W\kappa^2 d + wx^2 d}{Wd\kappa^2 + w\kappa^2 d + wx\kappa^2}\right\}},$$

or new period $> = \text{or} <$ T according as $x^2 d$ is $> = \text{or} < \kappa^2 d + x\kappa^2$; *i.e.*, according as $\kappa^2 < = \text{or} > \dfrac{d}{d+x}\cdot x^2$

now generally κ^2 is $> \dfrac{d}{d+x}\cdot x^2$
or new period is $<$ T.

APPENDIX III*a*.

Next consider the weight (50 tons) placed on board as in Appendix III. Then:—

(1) $(\text{New rad. gyr.})^2 = \dfrac{1}{8050}\left(8000 \times \overline{25{\cdot}45}|^2 + 50 \times \overline{10}|^2\right) = \overline{25{\cdot}34}|^2.$

$$\text{New period} = \frac{22}{7} \times 25{\cdot}34\sqrt{\frac{1}{2\times 32}} = 9{\cdot}95 \text{ seconds.}$$

(2) Vert. displac'm't of C.G. $= \dfrac{50 \times 10}{8050} = \tfrac{1}{16}'$. New value GM $= 1\tfrac{15}{16}$ ft.

$$\text{New period} = \frac{22}{7} \times 25{\cdot}34\sqrt{\frac{1}{1\frac{15}{16}\times 32}} = 10{\cdot}12 \text{ seconds.}$$

(3) New value GM $= 2\tfrac{1}{16}$ ft. nearly.

$$\text{New period} = \frac{22}{7} \times 25{\cdot}34\sqrt{\frac{1}{2\frac{1}{16}\times 32}} = 9{\cdot}803 \text{ seconds.}$$

Hence:—

(1) Weights placed on board horizontally diminishes period by ·5%
(2) ,, ,, ,, ,, above C.G. increases ,, 1·2%
(3) ,, ,, ,, ,, below C.G. diminishes ,, 1·97%

Discussion.

The discussion on this paper took place on 19th February, 1901.

Mr **Robert T. Napier** (Member) observed that Mr Laws must have met men who had hazy ideas as to the connection between metacentric height and the behaviour of a ship at sea, else he would not have brought such weight of mathematics to refute a fallacy. Surely every educated naval architect knew that reducing the metacentric height increased the period of roll, and made the ship more comfortable among waves. As regarded radius of gyration, most ship-designers had ample time in which to forget that such a quantity existed, as the cases in which it could appreciably be altered one way or another were sufficiently few. The wing ballast-tanks advocated by Mr Laws would have the effect claimed, but such tanks could hardly escape being measured as cargo spaces, and to handle cargo in them would be troublesome. The very real advantages of having the water-ballast in a double bottom, where it was always available, where it could not through mistake in handling lead to damage to cargo, and last, but not least, where it escaped tonnage measurement, quite explained the wide adoption of this arrangement in ocean-going steamers. Carrying water-ballast in cargo spaces had more drawbacks than dampness. The indispensable middle-line bulkhead was much in the way, as were also the extra pillars and braces, which could in no case be portable; and the small size of the hatchway, arising from the necessity for the hatch cover being all in one piece, limited the use of the hold. In the case of steamers trading on the coast of China, where the river bars restricted the draught of water, and ships with a beam equal to three times the draught, and consequently with excessive stability, were in use, the advantages of the deep athwartship tanks, as pointed out by Mr Laws, were recognised, and this form of ballast tank was the rule.

Mr **Archibald Denny** (Member) remarked that what Mr Napier had said was no doubt quite true, that naval architects were conversant with all the points dealt with in Mr Laws' paper, such as the effect of metacentric height and the winging

Mr Archibald Denny.

of weights; but this Institution did not only exist for the trained naval architect but for the younger members of the profession, and now he hoped also for the benefit of their friends the shipowners, and such a paper as this with numerical examples was likely to appeal to these gentlemen in a very straightforward fashion. He had tried for many years to induce shipowners to take more interest in the technical qualities of their steamers. His firm had supplied instruments and instructions whereby captains of ships might find the metacentric height of their steamers before leaving port; but so far, due to the lack of interest taken in such matters by shipowners and to the quick despatch which was demanded of captains of ships, success had not been great. He hoped that soon the majority of the shipowners in Glasgow would be members of this Institution and would come to listen to such a treatise as Mr Laws had just written. Such a paper would serve as a reminder to the older naval architects, could not but be useful to shipowners, and must be helpful to the younger men in the profession.

On the motion of the Chairman, Prof. A. BARR, D.Sc., Mr Laws was awarded a vote of thanks for his paper.

Correspondence.

Mr W. J. LUKE (Member)—Mr Laws seemed to have ideas regarding the influence of inertia on the rolling motion of ships which were in opposition to those generally received. On page 75 it was stated that "The position usually assigned to water-ballast is not such as to lend itself to the good behaviour of the vessel at sea; since not only does it considerably diminish the height of the centre of gravity above the keel, thus increasing largely the stability, but at the same time, being situated at a position far removed from the axis of rotation, it has, due to its inertia, a great influence on the rolling motion of the vessel." It seemed from this sentence that the author considered that an increase in moment of inertia was prejudicial to steadiness. This view of his meaning was borne out by the remarks on page 79, Mr W. J. Luke.

where, in dealing with the inertia influence, it was stated that "The best effect is obtained by giving the weights a central and higher position," which better effect it was sought to bring into harmony with results deduced from the equation for angular acceleration. He could not understand how this could be established. With an increase in the moment of inertia, the angular acceleration diminished, assuming that the external forces were not changed. Hence an increase of inertia conduced to a longer period, and was to be desired. From this latter view (which was the generally accepted one), wing tanks were preferable to central tanks, supposing no change was made in the position of the centre of gravity. Passing from this point, reference might be made to the formula on page 76, and the accompanying diagram on page 85. In the first place, the formula appeared to apply to a pendulum, and not to a ship; and from the diagram it appeared that for a swing of 50 degrees (on each side of the vertical) the period was lengthened by about 50 per cent. It was quite easy to demonstrate the fallacy of this formula by hanging up a heavy bob with a light but strong string, and to closely verify the approximate formula

$$T_1 = T\left(1 + \frac{a^2}{16}\right).$$

The correct formula for a pendulum, as found in Weisbach, was:—

$$T_1 = \pi\kappa\sqrt{\frac{1}{g \times GM}}\left\{1 + (\tfrac{1}{2})^2 \operatorname{Sin}^2\frac{a}{2} + \left(\frac{1\cdot3}{2\cdot4}\right)^2 \operatorname{Sin}^4\frac{a}{2} + \&c.\right\}$$

a being the angle of swing on each side of the vertical in each formula. To make any application of this to the rolling of ships, it first must be assumed that the curve of stability was a curve of sines, and then it appeared that if β was the range of stability, the lengthening of period for an angle $a \times \frac{\beta}{\pi}$ in the case of a ship, was the same as the lengthening of period for angle a in the case of the pendulum. In many cases the divergence of the curve of stability from the curve of sines was considerable, and the

Mr W. J. Luke.

application consequently failed. The only other method of approximation known to him was by means of Froude's process of graphic integration. Regarding the variable character of GM, it was stated, on page 78, paragraph *a*, that "The metacentric height is not practically altered in value, except in so far as the position of M is changed due to the deeper immersion of the vessel. Consequently, there is practically no change in the period of oscillation." This was put forward as a perfectly general statement, and was not free from objection. In many floating bodies the fall in M was very perceptible, with increase of draught, and consequently changes in the period of oscillation might be brought about of magnitude quite as great as those which the author had shown to be due to alterations in height of the centre of gravity, such as had been considered.

Mr W. Hök was afraid he was a sceptic as regarded the modern theory of rolling, and any conclusions based thereon were to his mind unreliable. He should therefore not touch on any of Mr Laws' conclusions, but only deal with the basis for his arguments, namely, the modern theory of rolling. This theory assumed that, for small angles at all events, the instantaneous axis of oscillation passed through the centre of gravity of the ship. This appeared to him impossible, but might be approximately true in special and nowadays obsolete cases. It was more true at the time the modern theory was invented, but it became less true every day as ships got squarer in the bilge and shallower in proportion to breadth. For instance, how was it possible to make anybody believe that a modern tramp, drawing approximately 9 feet light, having a centre of buoyancy 5 feet, centre of gravity 18 feet, and metacentre 27 feet above the keel, would roll about her centre of gravity? This would mean considerable lateral translation of the immersed body, and this lateral translation, he submitted, did not exist to any great extent owing to the resistance of the water. And, further, rolling round the centre of gravity meant in many instances extraordinary variations in the displacement which certainly did not exist in nature. Resistance to lateral translation

Mr W. Hök.

in a ship was not so great, of course, that the centre of buoyancy could not move laterally at all, but there was no doubt that the resistance to lateral translation was sufficiently great to prevent the vessel oscillating round her centre of gravity. In his paper read before the Institution of Naval Architects in 1892, he drew attention to a hypothetical case, and the diagram in connection therewith could almost represent the case of an oscillating ship when the forces of inertia were nil, which was, of course, the other extreme. No doubt the resistance of water to lateral translation of the vessel prevented the rotation round the centre of gravity, just as the forces of inertia prevented the oscillation round the metacentre, and something between the two hypothetical cases must happen, with the result that the ship oscillated not round the centre of gravity but round an instantaneous axis which was at some inclinations below the metacentre, at others feet above it, at others feet off the vertical centre line, and even sometimes below the centre of gravity itself. If Mr Laws' paper succeeded in calling attention to the incorrectness of the very fundamental principle on which the present theory was based, and induced the experimentalist to determine the position of the instantaneous axis of oscillation in representative cases—for he was afraid mathematicians would fail—his paper would serve a very useful purpose.

Mr John Smellie considered that the arguments in favour of fitting deep hold tanks, and even 'tween deck tanks, in the broad cargo vessel of to-day, although well known to naval architects, had not had that influence upon the design of such vessels as their importance warranted. The reasons for this were not far to seek; they were, of course, the objections of the shipowner to increased cost, decrease of dead-weight, and, in short, to the taking away with the left hand what was given by the right. It was scarcely to be expected that the shipowner whose vessels were broad because the draught was limited, and whose supreme desire was for maximum dead-weight coupled with every possible facility for the expeditious working of the cargo—for even the presence of a single pillar in the hold space was in these days

Mr John Smellie.

looked upon with suspicion—was likely to agree to the fitting of longitudinal central tanks even although they were scientifically situated. In the light condition, a vessel of say 380 feet by 50 feet, by 30 feet, might have a G.M. of 8 or 10 feet, and this value would be to some extent augmented by the filling of the inner bottom tanks, with the result that, as Mr Laws pointed out, heavy short period rolling was invited, and attended by racking stresses of a severe nature. Had the vessel been fitted with two deep tanks other than the fore and after peak tanks, one in the fore hold and the other in the after hold, each with a capacity equal to that of the inner bottom, then, without filling the bottom tanks at all, double the immersion which could be obtained in the usual way would be brought about, with good results as far as propulsion was concerned; and certainly with beneficial results as to rolling, for the G.M. in this condition would be very materially decreased, probably six-tenths of its value in the light condition, due to the centre of gravity of the added ballast being little below that of the ship, conjointly with the lowering of the metacentre on account of increased draught. Properly designed tanks fitted across the ship with a central longitudinal bulkhead carried somewhat beyond the athwartship boundaries, and tapered off into the structure at top and bottom, should give no trouble as regarded strength and could readily be arranged to act efficiently as cargo compartments. Inner bottom tanks in many respects proved so useful that it was hardly likely that they would be dispensed with in favour of the weight so saved being applied to a like purpose elsewhere in the vessel. Compensation was readily made for the burning out of coal situated low in the vessel; and it often happened, when loading, that heavy cargo required to be taken on board at the last moment, with the result that the vessel, probably very stiff when light, would be rendered unstable in the sailing condition but for the simple remedy of filling one or two of the inner bottom tanks. Mr Laws' paper was suggestive to the shipowner, in showing what might be done for certain vessels whose trading conditions were known, and to shipmasters

Mr John Smellie.

in bringing home to them the possibility of their doing very much more for the welfare of their vessels and the comfort of passengers and crew than was done at present; and if they could be induced to study the principles set forth, and to incline their vessels before sailing so as to obtain the actual G.M. and then note the behaviour of the vessels when at sea, they would gain for themselves data of a definite nature which would enable them to predict what they should do in any given set of circumstances.

Mr S. Stansfield, B.Sc.—The paper had suffered through the author's endeavour to be both complete and concise, and it was not always clearly stated which considerations made for his contention, and *vice versa*. Respecting the mathematics there was no necessity, page 76, to assume the angle of roll small, as both "κ" and "GM" or "d" came outside the bracket

$$\left\{ \overline{1+\tfrac{1}{2}}\,\Big|^{2} \ \text{Sin.}\ \frac{2a}{2} + \&c. \right\}$$

which expressed the change with change of angle of heel. In fact Appendix I. was not necessary. The symbolical work in the Appendices was evidently correct, but some arithmetical errors appeared to have crept in to the examples of Appendices II*a*. and III*a*. Briefly the three results in Appendix II*a*. should be ·05 per cent., 1·6 per cent. and 1·6 per cent. instead of ·06 per cent., 1·7 per cent. and 1·4 per cent. respectively; and in Appendix III*a*. the results should be ·2 per cent., 1·4 per cent. and 1·8 per cent. instead of ·5 per cent., 1·2 per cent. and 1·97 per cent. respectively. If, in the latter example, the horizontal shift was not considered in (2) and (3) the three results would be ·2 per cent., 1·6 per cent. and 1·6 per cent. respectively. These alterations removed an apparent inconsistency in the results, and better enabled one to compare the effect of raising and of winging weights. For purposes of comparison, however, a horizontal shift of only 10 feet should not have been taken as comparable with a vertical rise of 10 feet. The latter represented about the maximum available rise of centre of gravity of ballast in a ship of 8000 tons, and in such a vessel the use of wing tanks would mean placing the water-ballast at 20 or 22 feet from the centre of gravity of the vessel. If the 50 tons of Appendix II*a*. were so placed the change in result (1) would be to ·25 per cent. instead of ·05 per cent. This was still only about one-sixth of the effect of raising the same weight 10 feet, and so bore out the author's contention that location vertically was most important in considering the effect on the period of rolling. In considering the effect of additional weight, as in Appendices III. and III*a*., it should be noted that if wing tanks were utilised the period of oscillation would not be sensibly diminished as would perhaps appear from III*a*. (1), for the distance of the new ballast from the ship's centre of gravity would about equal the radius of gyration of the ship. In fact, in a vessel whose beam was about twice the draught, the water in the wing-tanks would contribute about the same to the κ of the vessel as an equal amount of water in the double-bottom, but the former would have the advantage in vertical position by diminishing GM. Any provision for carrying water-ballast above the double bottom would entail expensive work. For each hold deep tank two well stiffened transverse bulkheads would be necessary, and these would not add to the ship's longitudinal strength at all. Constructional difficulties would arise in inserting wing-tanks, but there would be the advantage of, at least, two extra partial longitudinal bulkheads, which would naturally occur at and beyond the extremities of the bridge, or precisely where the strength was wanted. Referring to page 80 of the paper, the useful stability curve again reminded one that the greater the stability—and therefore the more water there was in the double bottom—the less would be the angle of roll due to impulsive forces. These were far more likely to be met with in "humpy" seas, and where the wave period was short, or, as far as the ship was concerned, irregular, and where consequently the danger of a correspondence of wave period and ship's period was least. The curves, Fig. 1, showed at a glance how very greatly the angle of heel might be increased through a small change in the slope of the stability curve; and in the sea mentioned

Mr S. Stansfield, B.Sc.

it was more often desirable to limit the roll than to increase the natural period of the ship. The author had, however, made it abundantly clear that facility for admitting water high above the usual tanks would be a distinct advantage.

Mr LAWS, in reply, expressed regret at his being unable to attend the meeting when his paper was under discussion. He thanked the gentlemen who had contributed to the criticism for the interesting and valuable remarks they had made. He desired to say that, in venturing to submit this paper to the Institution, he had in view two objects, namely, (1) to try and present the fundamental principles of rolling generally in such a way as to be understandable, perhaps more to those not directly connected with shipbuilding, as, *e.g.*, the shipowner and shipmaster; and (2) by the aid of these principles to show the effect of water-ballast, as generally situated in the vessel, on rolling motion. Most of the subject matter contained in the paper was undoubtedly known to naval architects generally, as Mr Napier had stated; but that applied to almost everything which might be written on any subject with regard to those individuals who might be closely associated with the particular subject, and so in this case what was known to the older professional men was possibly unknown to the younger, and to those not directly connected with the profession. As a matter of fact, shipmasters and shipowners, generally speaking, assumed to know little as to the actual reason of certain effects produced in their vessels, and a few examples, put concisely, often went a long way towards influencing them, and this the author had endeavoured to do. Mr Smellie had rightly observed that, in any attempt to remedy the evil of the light tramp in ballast, the extra first cost which would ensue therefrom, as well as the loss due to decreased deadweight, must from the owner's point of view also be considered; but the question still remained, in a ship well designed for carrying water-ballast, as to whether this loss would not be altogether turned into a gain when one considered the often very expensive repairs to the structure after a voyage in ballast, and the time lost in consequence of the vessel being overdue, to say nothing of the wear and tear of the propelling machinery, breaking of tail shafts, and the ultimate shorter life of the vessel due to the great straining of the structure in consequence of the buffeting to which she was invariably subjected. It would seem as a result that not only would the bill for repairs be considerably reduced, but more rapid voyages would be made, which would put the net balance on the side of the owner. In ships employed in grain or coal carrying, the fore and aft bulkheads forming the boundaries of the tanks would not be a disadvantage, but rather the reverse, in so far as shifting boards might in that case be dispensed with; and dangers which often accompanied these boats from the fact of the probability of the grain or coal shifting when the ship was rolling would be minimised. The question of hatches suitable as to size and number was perhaps the one requiring consideration, but was, after all, not an insurmountable difficulty. The fact of so little being done to remedy the defects so prominent in some vessels of a certain class at sea was, as Mr Denny stated, undoubtedly due to the lack of interest taken in these matters by shipowners, who were content to allow matters to remain as they were so long as the earning power of the vessel was sufficient for them. The question of axis of rotation or oscillation for a ship rolling was probably still a moot one as regarded ships rolling through large angles, but for small angles up to 10 or 15 degrees the theory of instantaneous axis, though variable, as stated in the paper, approximately passing through the C.G. of the vessel, was probably the correct one. The idea suggested by Mr Hök of endeavouring to determine by experiment the position of this axis was a good one, although it would doubtless be difficult to perform. It was quite true, as Mr Luke observed, that the formula given on page 76 applied to a pendulum, but to a "compound pendulum," and might be used, with limitations, to obtain the period of swing of a ship when oscillating, as he (Mr Laws) had explained. By referring to the diagram on page 85, it would be seen that the formula gave

Mr Laws.

5 per cent. increase of period, and not 50 per cent. as stated by Mr Luke. He failed to see how there might be any fallacy in the formula referred to above, or how that might be proved, as Mr Luke thought, by hanging up a heavy bob with a light and long string, and verifying the approximate formula he gave, viz.,

$$T_1 = T\left(1 + \frac{a^2}{16}\right).$$

By analysing the latter, it would be seen that it really applied to a compound pendulum, and was, therefore, directly in agreement with the general formula given by the author, where

$$T = \pi\kappa\sqrt{\frac{1}{g \times GM}};$$

and therefore, for an angle of swing a, they had, by including the second term within the brackets,

$$T_a = T\left(1 + \left.\overline{\tfrac{1}{2}}\right|^2 \text{Sin}^2 \frac{a}{2}\right) = T\left(1 + \frac{a^2}{16}\right),$$

where $\frac{a}{2}$ was taken equal to Sin. $\frac{a}{2}$. The bob and string pendulum, however was a "simple pendulum," the time of vibration of which was given by $T = \pi\sqrt{\frac{l}{g}}$ where l was the length of pendulum (or string), and was quoted on page 77. That, of course, might be directly deduced from the general formula by putting $l = k$ and $GM = l$, when, if a were small,

$$T = \pi l\sqrt{\frac{1}{g \times l}} = \pi\sqrt{\frac{l}{g}},$$

as above. The first part of Mr Luke's remarks was hardly in keeping with the meaning intended to be conveyed by the author in the quotation mentioned. It would seem that Mr Luke was there replacing moment of inertia for inertia—the meaning of which latter was meant to be the property possessed, or effect produced, by virtue of the usual position of the water-ballast, and which was detrimental to the good behaviour of the vessel at sea. That was borne out in Appendices II*a.* and III*a.*, where the relative effect of radius of gyration and GM on period was demonstrated. The formula

$$C\,\frac{d^2 a}{dt^2}\,wk^2$$

given on page 79 showed—assuming the moment of accelerating forces to remain the same — how the angular acceleration was likely to be increased by double bottom tanks in relation to wing tanks, since the ballast would probably bring about a value of κ in the latter position greater than the former, depending, of course, on the dimensions of the ship as regarded beam in the latter case and depth in the former. Mr Stansfield in his remarks appeared to have misunderstood that Appendix I., as the outcome of the formula given on page 76, was used to show what was generally known to naval architects, that the period was practically constant up to 10 or 15 degrees on either side of the upright, whether calculated by

$$T=\pi\kappa\sqrt{\frac{1}{g\times GM}}$$

or by including the terms inside the brackets as a factor. With regard to the Appendices II*a.* and III*a.*, he thought if Mr Stansfield again checked them he would find them practically in order, being perhaps more exactly as follows:—

$$\text{In II}a.\begin{cases}10{\cdot}006=\ {\cdot}06 \text{ per cent.}\\ 10{\cdot}168=1{\cdot}68\quad\text{,,}\\ 9{\cdot}855=1{\cdot}448\quad\text{,,}\end{cases}\ \text{and in III}a.\begin{cases}9{\cdot}955=\ {\cdot}45 \text{ per cent.}\\ 10{\cdot}116=1{\cdot}16\quad\text{,,}\\ 9{\cdot}804=1{\cdot}96\quad\text{,,}\end{cases}$$

THE ENGINEERING CRISIS IN THE NAVY.

By Mr D. B. Morison.

Read 18th December, 1900.

The vulnerability of our wide-spread imperial position, our dependence upon sea-borne food stuffs, and the close connection between our maritime commerce and industrial welfare, should render all questions relating to the true and realisable value of our naval power of supreme interest and importance to every thinking citizen of the British Empire.

The first essential of the thinking process, however, is the possession of food for thought, and the exigencies of modern life demand that this shall be supplied to the public in a concentrated and easily assimilated form, prepared, preferably, by recognised authorities, in whom the public repose sufficient confidence to enable them to form a conscientious opinion without subjecting the facts as submitted to much independent and troublesome analysis. The vast majority of people being almost entirely absorbed in the necessary and exacting task of earning a living, and having their attention closely concentrated within their own particular sphere of life, it is scarcely to be expected that any considerable proportion of them will make a study of such special questions as national defence or the engineering requirements of modern navies. To the illiterate, such matters are necessarily a sealed book, whilst the bulk of the educated classes regard them as too complex and mysterious for their comprehension; or, what is even more regrettable, consider them to be of very abstract importance to the individual, and are therefore quite content to exercise that blind faith which is so conducive to ease of mind, and to place implicit confidence in those ministers of state and public officers who are specially appointed by the nation to safeguard its interests. Herein lies the danger that existing sources of weakness may be covered up and perpetuated, until a great national crisis, calling for the full and prompt exercise of the nation's powers, reveals in all its nakedness the appalling fact that the legitimate expectations of the country cannot be realised, and that the heavy premiums for national insurance have been paid into public departments which are in the moments of danger incapable of fulfilling their vast responsibilities. It would surely be foolishly optimistic to expect drastic reforms to be initiated by those public servants, upon whom they would necessarily inflict personal loss, inconvenience, and endless worry, and of whom but very few could expect to reap any reward or distinction.

In view of these facts it is the duty of the engineers of this country to closely study the engineering crisis in the evolution of the modern navy, and to assist in the education of public opinion by disseminating authoritative statements of their collective opinions, and their recommendations for the creation of greater efficiency in the engine-rooms of the fleet.

It was due to a sense of this duty that the author prepared his first paper on "The British Naval Engineer," which was read last March before the North-East Coast Institution of Engineers and Shipbuilders at Newcastle, and, at the conclusion of the discussion, that Institution fully endorsed the views on this point which had been expressed, by resolving that in view of the national importance of the subject, the kindred institutions throughout the Kingdom should be invited to take part in its further discussion.

The President and Council of the Institution of Engineers and Shipbuilders in Scotland, with characteristic insight and energy, at once appreciated the national importance of the issues involved, and cordially responded to the invitation, by giving immediate expression of their desire to assist in the patriotic duty of promoting the much-needed reforms in the engineering department of H.M. Navy.

It is the primary object of this supplementary paper to deal with some of the broader aspects of the question, but it is also desired to bring to your notice certain developments which have taken place since the reading of the first paper, so that you may discuss the subject with a full knowledge of the up-to-date facts so far as it lies in my power to supply them within the limits of the time available.

In an addendum to the paper on "The British Naval Engineer" an abstract was quoted from the statement of the First Lord of the Admiralty, explanatory of the Navy Estimates for 1900-1901, which explained the nature of certain minor concessions that had been made in respect of the promotion, status, and pay of engineer officers, and were described by the First Lord as the result of the deliberations of an Admiralty Committee. It may be mentioned in passing that this committee consisted of Rear-Admiral Douglas, Capt. Prince Louis of Battenberg, and Mr M'Cartney, M.P., the engineering branch, it will be noted, being entirely unrepresented. It is interesting to contrast the constitution of this committee with the *personnel* board appointed in 1897 by the United States Government, to report upon the causes of the then existing dissatisfaction of the naval engineers, and the friction between the executive and engineering branches, and to formulate a scheme for reform which would establish conditions more conducive to the efficiency of the U.S. Navy. This board consisted of seven executive and four engineer officers, and was presided over by Mr Theodore Roosevelt, assistant secretary of the navy department.

The new scheme of pay adopted by the Admiralty for the engineer officers as the result of the deliberations of the committee has now been ascertained to yield the following negative results:—

The junior engineer officers of "engineer" rank, during their eight years' service in that rank, obtain under some conditions a slight increase in emolument; but senior officers, *i.e.*, "chiefs" and "fleet" engineers, incur an actual loss owing to the fact that the increase in the rate of daily pay is more than counterbalanced by the decrease in the rate of charge pay. Nearly all "chiefs" on ships in commission, and most in the "Reserve," lose under the new scheme a portion of their present pay, whilst even the officers of "engineer rank" stand to lose by the reduction in charge pay when they have attained the highest rate of daily pay, as this higher rate is the same as under the old scheme, and engineers of that seniority are in the most cases in charge of machinery, the charge pay for which has been reduced. This loss of pay to engineers at the top of the list is in the aggregate very serious now that they have to wait so long for promotion to chief engineer rank. The rate of charge pay has been reduced from a maximum of 9s to a maximum of 5s per day, and the decrease in the rates actually paid amounts to 44 per cent. in the case of large ships, and 66 per cent. for second-class cruisers. This, too, in spite of the fact that although the maximum rate of daily pay for fleet engineers has been raised from 26s to 30s, it is still less than that obtainable in the other civil branches of the service, in which the daily pay rises to a maximum of 33s.

The question of engineer officers' pay, however, is of subsidiary importance, as viewed from a national standpoint, and the unreality of these alleged concessions has only been referred to for the purpose of illustrating the discreditable spirit in which the interests of the engineering branch of the Royal Navy are dealt with by the Admiralty.

Although the rates of pay must necessarily have a direct and important bearing upon the quality of the engine-room staffs obtainable, it is quite certain that no radical improvements will be effected in that direction until the engineering branch is adequately represented upon the Board of Admiralty, and with a view to securing this drastic reform it is advisable that we should use arguments which are less subject to public suspicion than those based upon considerations of engineer officers' remuneration.

Unhappily for the nation, there is no lack of material for a strong case against those responsible for the perpetuation of the existing inefficient organisation.

Recent experience with our most modern ships, fitted with Belleville boilers, has amply confirmed the statements made in my paper with reference to the inadequacy of the engine-room complements in numbers, skill and experience. The Admiralty do not appear to have grasped the obvious fact that the recent radical changes in *matériel*, in respect of boilers, increased steam-pressures, and increased complications of the machinery and armaments of our war ships as a whole, demanded simultaneous changes in the numbers, organisation and training of the engineering *personnel*, and whatever may be the inherent defects of the particular type of water-tube boilers which the Admiralty has adopted on so wholesale a scale, there is good reason to believe that a defective *personnel* has been a contributory cause of the very serious troubles which have been experienced.

The following significant remarks were made by Admiral Sir Nathaniel Bowden-Smith, K.C.B. (Commander-in-Chief at the Nore), in the course of a recent discussion on "The Training of Seamen," at the Royal United Service Institution, and contain a highly authoritative, though no doubt unintentional, admission of the existing dangerous state of things in the engine-rooms of the navy.

> "The lecturer treats of the question of training seamen as though they were the only people to be considered in a modern fighting ship, whereas the engine-room staff are amongst the most important ratings, and I do not see how you can consider the training of seamen apart from the rest of the ship's company. As I understand Sir Gerard Noel, and the school which he represents, he would have two or more training squadrons of masted ships fitted with screws and engines, and therefore requiring a certain number of stokers. On an emergency arising, these are all to be turned over suddenly to modern ships, so that the engine-room ratings would find themselves under new conditions, having to contend with water-tube boilers and steam at 300 lbs. pressure with all its results. The consequence will be a breakdown in the engine-room, and then what will be the use of the gunners, even though

> they should shoot better than other men trained in modern ships, which I very much doubt? In advocating such a system, *I fancy my friend Sir Gerard Noel can hardly realise the somewhat bitter experience we are undergoing at present with the boilers and machinery of some of our ships.*"

Ships fitted with water-tube boilers require from 30 to 40 per cent. more stokers than ships of the same power fitted with tank boilers, without making any allowance for men sick or in cells, etc., and not only are these greatly increased numbers necessary, but it is absolutely essential, if the boiler-room duties are to be efficiently and safely performed, that the stokers shall be thoroughly expert. So tardy has been official recognition of these facts, that the numbers, even of untrained stokers, now available fall far short of the real requirements of the ships in commission, and it is only within the past few months that any steps have been taken to give the second-class stokers even a superficial training in boiler-room duties, before drafting them to sea-going ships. Money, and still more valuable time, have, however, been prodigally expended upon instructing stoker recruits in military drill and the use of arms. To the ordinary mind it would appear that the ability of a stoker to hit a hay stack at 50 yards is of insignificant importance to the nation, as compared with his ability to efficiently perform his proper duties in the boiler-rooms of the fleet. No doubt the military instruction imparted is useful as a disciplinary training, but the impossibility—if such there be—of combining discipline with the performance of their proper duties is not quite apparent.

An excellent and very carefully prepared article, entitled "We always are ready," by Rollo Appleyard, which appeared in the September number of "The Fortnightly Review," contains some convincing figures demonstrating the dangerous extent to which the engineering branch of the navy is under-officered and undermanned.

It is stated by the author that, according to the Admiralty's own admission, 1,255 engineer officers, 3,277 engine-room artificers, and 29,387 stokers, of various ranks and ratings, are required to enable the ships of H.M. fleet to put to sea, whereas the actual numbers at that time available were: 961 engineer officers, 3,024 engine-room artificers, and 21,472 stokers; the deficits being thus, 294 engineer officers, 253 engine-room artificers, and 7,915 stokers. It appears, however, that the Admiralty estimate of complements does not provide any margin for those on the sick list, for the wastage due to war, or for the increased complements necessary to withstand the strain of active service conditions, and Mr Appleyard shows that if 7 per cent. be added for the sick list, and 20 per cent. to meet the requirements of war, the deficits would be increased to the alarming totals of 536 engineer officers, 1,138 engine-room artificers, and 15,848 stokers.

These statistics provide food for thought, which it is very difficult for a patriotic Britisher to assimilate with any degree of satisfaction.

The serious shortage of properly skilled and experienced engine-room artificers is a source of weakness, the danger and importance of which it is difficult to exaggerate. As the warrant and petty officers, such as gunners, boatswains, and carpenters, are to the executive officer, so are the artificers to the engineer officer. They are the backbone of the engine-room, and are the working mechanics of the fleet. Every development in machinery demands increased practical skill on their part, and it is necessary that they should not only be good handicraftsmen, and competent sectional watchkeepers, but that they should also have a good general knowledge of the details of the machinery and armaments. Every advantage in pay, and comfort on board, should be offered to induce the right class of men to join. The Admiralty have recently appointed well-known engineers in different parts of the country to recruit artificers, and although the understanding is that they are not to be too exacting as to qualifications, the numbers obtained are very disappointing and quite inadequate to meet the requirements of the Service. My personal experience, in the works with which I am associated (and to which reference was made by Sir

Thomas Richardson in the course of his contribution to the discussion on my former paper), has been that, although I took considerable trouble to induce intelligent young journeymen to volunteer as naval artificers, they one and all refused. To my astonishment I ascertained, however, that a blacksmith's striker had offered his services and had been accepted. This is only one typical instance of the lowering of the standard, which is not only dangerous by reason of the incompetency of the men enlisted, but tends to create discontent amongst the skilled and experienced members of the engine-room staffs, upon whom an unfair proportion of the work to be done is necessarily thrown.

The Admiralty appears to have lost all sense of proportion in its dealings with the engineering *personnel* of the Navy, towards which its attitude is one of toleration merely on account of its necessity. No really honest effort has yet been made to grapple with the difficulties, and all concessions which have been granted have been half-hearted, grudgingly bestowed, and for the most part clumsily devised, as, for example, the new scheme of engineers' pay and charge pay already referred to. In order to cope with the shortage of engineer officers, recourse is about to be made to an unfortunate expedient which has always caused annoyance and irritation, and has, therefore, tended to induce inefficiency. I refer to the introduction into the Navy of temporary service engineers, for which an examination is to be held this month. Such a system of entry, through outside channels, destroys the uniformity of training and the homogeneity of the whole body of naval engineers, and is extremely unfair to those officers in their relationship to other branches of the Navy. It is also unfair to the engine-room artificers, the senior and more competent of whom should be given more rapid promotion to the warrant rank of artificer engineer, and thus fill some of the places which these new men are to be brought in to take over their heads.

The serious dangers attending the present attenuated and insufficiently experienced engine-room complements which are provided on our modern war ships are effectively illustrated by the recent disastrous voyage of H.M.S. "Hermes." This ship is a second-class cruiser, fitted with twin screws and engines having an agregate of 10,000 I.H.P., supplied with steam by 18 Belleville boilers carrying a steam pressure of 300 lbs. The auxiliary machinery consists of the undermentioned 47 engines:—

4 Circulating engines.
2 Sets of distilling plant.
2 Sets of engines and dynamos.
1 Double-cylinder steering engine.
2 Sets of air compressors.
1 Refrigerating engine.
6 Feed engines.
2 Hot-well engines.
4 Bilge engines.
6 Furnace air-pumping engines.
6 Ventilating engines.
2 Reversing engines.
6 Double-cylinder ash hoists.
2 Double-cylinder coal hoists.
1 Capstan engine.

The armament consists of eleven 6-inch, eight 12-pounder quick-firing guns, and a number of smaller machine guns, 2 submerged torpedo tubes, and 8 torpedoes.

The engine-room staff was as follows:—

OFFICERS.

1 Chief engineer
1 Engineer.
2 Assistant engineers.

(One assistant engineer had only two years' sea experience and the other none, he having just left Keyham college.)

ENGINE ROOM ARTIFICERS.

2 Chief engine-room artificers.
4 Engine-room artificers (3rd and 4th class).
3 Acting engine-room artificers (4th class).

N.B.—An acting E.R.A., 4th class, is one who does not possess a stokehold watch-keeping certificate, and generally has not completed one year's service.

Only one artificer had any previous experience of Belleville boilers or of the ship.

The chief E.R.A. was a boiler-maker, one E.R.A. was a blacksmith, another a coppersmith, and the remainder were fitters; but of the entire number of E.R.A.'s only three had any previous sea experience.

STOKERS.

6 Chief stokers.
16 Leading stokers (1st and 2nd class).
72 Stokers (1st and 2nd class).

About 30 per cent. of the stokers had no sea experience whatever, and were quite incapable of performing their duties efficiently, or of withstanding the physical strain thrown upon them. The complement of stokers was based on the assumption that one man was sufficient for each boiler, and that in addition to firing he would be able to trim his own coal. This assumption was entirely unwarranted by any previous experience, and subsequent events proved it to be lamentably incorrect.

On leaving England the "Hermes" was employed on convoy duty with the South African transports, and her boilers were under easy steam for about two months. Minor troubles arose in connection with the boilers and machinery generally, but the staff was neither adequate nor sufficiently competent, as a whole, to cope with the difficulties effectively, and the entire work and worry involved fell upon the few experienced men who soon became physically exhausted, and, as a consequence, the troubles multiplied. The inexperienced men did their best, but they were of course, under the circumstances, of but little real assistance. The chief engineer and his assistants did all that men could do up to the limits of physical endurance. The chief became seriously ill, and in the course of a short time many of the other officers and leading engine-room ratings became incapacitated. The depletion of the experienced and capable members of the engine-room staff was naturally attended by increased liability to break down, and accident followed accident until the engineering department was in a complete state of collapse. During the later and more acute stage of the troubles, lieutenants were stationed in the stoke-holds, presumably with the idea that, by the exercise of the superior authority of the executive officer, they would be able to keep the men under control, and check any tendency to demoralisation which might have been developed by the severe and prolonged strain to which the men had been subjected. This object would appear, however, to have been defeated by the exacting demands made upon the time and attention of these executive officers by the task of avoiding ashes and hot water under foot, and boiling water and escaping steam overhead. Courage is only comparative, and is largely a matter of becoming habituated to special conditions and environment. An executive officer may be brave and undeniably capable on the quarter deck, and yet be ridiculous and redundant in a sorely stricken boiler- or engine-room. Escaping high-pressure steam and scalding water possess terrors which may be demoralising to a man who has trained and disciplined himself to regard the possibility of dismemberment by shell fire with philosophical stoicism.

This is another proof of the necessity for granting to engineer officers complete executive control over all men deputed to perform duties in engine- and boiler-rooms or bunkers, no matter whether they be drawn from the seamen ratings, or whether they are regular members of the engine-room complements.

This complete breakdown of H.M.S. "Hermes," attended as it was by the placing of the ship and its crew in a position of some peril, is by no means a solitary instance of the failure of our most modern types of war ships to maintain efficiency throughout voyages of even the most moderate duration. Yet with a fatalism which is incomprehensible, and—from the national point of view—intolerable, the Admiralty does not take, or even contemplate, intelligent measures to cope effectively with the serious difficulties with which it now finds itself face to face.

Any system of naval administration must be hopelessly defective which can result in the commissioning of ships so excessively liable to serious breakdowns as typical ships of different classes, representative of the whole of our modern fleet, have proved themselves to be, and under which those ships are sent to sea with engine-room staffs that are known to be inadequate in numbers, skill, and experience.

In these days of false sentiment and spurious humanitarianism, the popular scapegoat for all sins of commission or omission, in departments of state, is that nebulous and impersonal entity known as "the system." It must, however, in fairness to the present Board of Admiralty, be admitted that, the existing difficulties are the result of the perpetual failure of successive preceding Boards of Admiralty to realise the fact that the revolutionary change from sail and smoothbore muzzle-loading cast iron guns to steam propulsion and highly mechanical armament, demanded corresponding drastic and far-reaching changes in the consititution and training of the naval *personnel.* The present Board of Admiralty has been unfortunate in succeeding to power and responsibility, to reap the whirlwind, at a time when the evolutionary process has reached its most critical stage.

In time of peace, breakdowns of our war ships simply involve the loss of money, and the physical collapse of a proportion of the *personnel;* but in time of war a series of such accidents could not fail to be a serious national disaster, and might even imperil the very existence of the empire. It is therefore imperative that the primary causes of the present dangerous inefficiency should be completely removed, and that a more liberal and enlightened policy should be adopted in the administration of the Navy.

It is a waste of public money, and a betrayal of public confidence, to build ships, unless steps are taken to ensure, so far as human knowledge and foresight will permit, that each ship when completed and manned will be completely effective. The mere construction of ships does not necessarily create naval power which has any existence outside the world of ink and paper, and until there is some indication that intelligent measures are to be taken to render our existing ships really efficient, it is folly to speculate on the value of the increased national insurance afforded by the additional ships now being built. When these new ships are completed it will be impossible, under the existing conditions, to provide them with the complements of experienced engineer officers, thoroughly skilled artificers, and trained stokers, necessary to convert them into efficient fighting units.

In the course of a recent discussion at the Royal United Service Institution on a paper entitled "The Training of Seamen," by J. R. Thursfield, Esq., some interesting revelations were made of the unfortunate attitude which many representative naval executive officers of high rank take up towards the important questions at issue relating to the engineering branch. Admiral Sir John O. Hopkins, G.C.B. (late Commander-in-Chief in the Mediterranean), said:—

> "The officers learn a smattering of engine work, but they should be in a position to take their place as engineers if called upon. I remember what the Khedive of Egypt did when he was bothered by his engine-drivers for more money. He said, 'Very well, I will give you increased pay, but you must have on your engines a native stoker to help stoke and drive the engine.' The native stoker accordingly came, and helped the driver. But bye-and-bye he became qualified to drive the engine himself. That was the Khedive's chance, and on the next occasion of a further demand by the engine-drivers he said, 'Be off out of it, the stoker will drive the engine in future.' Let us take this lead and try and know as much engine-driving as engineers. Another point is (perhaps foreign to this discussion): Why should not these engineers have executive rank? It is merely taking command of a certain number of their men, which at present they do as much as any so-called executive. Then why not call them executives as, of course, they play a very important part in a ship? If it pleases them to be called executives,

> and we get better work out of them in consequence of calling them so, and they achieve as they think, a better position, it will hurt nobody and will content them."

The first portion of this utterance, coming from an officer of such mature experience and responsible rank, tends to create a feeling of despair as to the possibility of the adoption of a liberal and enlightened policy by the Admiralty; and it is indeed a happy circumstance, on which the admiral is to be congratulated, that he immediately followed it up by a statement indicative of a more reasonable frame of mind, and suggestive of the latent possibility of his ultimate complete conversion to that line of policy which can alone provide our ships with an efficient *personnel* capable of realising their full fighting values.

Captain A. C. Corry, R.N. (H.M.S. "Camperdown"), in the course of a somewhat involved contribution to the discussion, made the following extraordinary and contradictory statements:—

> "The life of the seaman or officer on board a modern steam man-of-war is about as much hedged in by humanly invented pressures as that of any man in the world. Not only is he amenable in the last resort to the ordinary laws imposed upon his countrymen, but he is surrounded by a network of highly artificial pressures which affect his smallest movement. Now, the effect of these pressures continued over a long period is to produce a certain set of qualities, good and bad. He comes in time to look at life and at his business from the steamship and machine point of view, and he becomes, of course, daily more incapable of viewing his profession from any other point of view than that of the mechanic or mere artilleryman. The sea he may neglect. *That is dealt with for him by the constructor and the engineer. The wind and weather are*

no concern of his; the engines drive him against both he knows not how. There is no need for him to know the capacities of every man upon the lower deck and every officer above him."

"Another question which has been raised in this discussion is that of the necessity, possibility, and advisability of giving what is called 'Executive Rank' to the class of officers now known collectively as the 'Royal Naval Engineers.' What is the meaning of the word 'Executive'? Does it imply merely, as many persons seem to think, the wearing of more gaudy uniforms, the enjoyment of a higher social position, and the drawing of a higher scale of pay? If this is all that the Naval Engineers want, it is certainly not for me to wish to refuse it to them. But their claim to 'Executive Rank' involves a far higher pretension than this. What is 'Executive,' and what are the attributes that it implies? It is a demand for power to 'punish their own men.' This matter is discussed as if anybody is competent to punish; the fact lies that no art requires a more searching and thorough training than the art of justly awarding punishment. The demand of Royal Naval Engineers is exactly like a demand that every employer of labour throughout the country should be allowed to exercise the functions which are now the exclusive property of the magistrate and judge. Punishment, indeed, mere punishment, the awarding, rightly or wrongly, of cells or other penalty, is the easiest thing in the world. But just punishment is, equally, probably the hardest. To give a man ten days cell is easy enough for any man; to weigh and balance the evidence upon which he is to be, or has been, convicted is entirely another thing. The glory of the 'Executive Officer' is that

> he shall be a man in whose hand sane and reasoning men will gladly place their lives at the moment of trial. If the Royal Naval Engineer officer wishes to do this, and hopes ever to do it thoroughly, he will find that, in learning this trade, he will have but little time indeed left for acquiring also his own."

On the one hand, this executive officer bears testimony to the important influence of the mechanical elements of the ship's constitution, and in an unwonted spirit of self-abnegation owns right up to the fact that the constructor and the engineer take the heavier portion of the burden of responsibility from off his shoulders; and, on the other hand, he refuses to grant to that highly responsible officer, the naval engineer, that power to punish his departmental subordinates which is necessary to give him proper authoritative control. Is it not a palpable absurdity to withhold from responsible engineer officers of mature age, who have spent their whole lives in managing men, a power which is granted to mere youths in the executive branch? and that on the untenable ground that the training of the former prevents them from acquiring even in long years the sense of justice and proportion with which the young executive officer is credited, apparently as a heaven-born gift. Captain Corry is particularly unfortunate in stating that "the demand of Royal Naval Engineers is exactly like a demand that every employer of labour throughout the country should be allowed to exercise the functions which are now the exclusive property of the magistrate and judge." I venture to think that the naval engineers would be only too grateful if they were endowed with the ample powers of punishment enjoyed by employers of labour, who, amongst other means of dealing with offences against their interests, can instantly dismiss any incompetent or insubordinate employee. It is, however, scarcely worth while to subject such nonsense to destructive analysis.

The root of the whole difficulty lies in the fact that, at the present time, when engineering *matériel* has risen to a position of supreme importance as a component of naval power, a fanatical attempt is being made to maintain the engineering *personnel*, which is its essential complement, in a position of inferiority and executive powerlessness, which bears no relation to its present functions and responsibilities, and is based on conditions which have long ceased to exist. The fighting value of a modern warship is determined by the possession of a variety of qualities, the most important of which are dependent for their existence upon the efficiency and workability of the propulsive machinery and the mechanism of the armaments, for both of which officers of the engineering branch are now responsible, and for which officers who are engineers must always be responsible. The unjust and prejudiced policy of repression, which it has always been a tradition of the Admiralty to adopt towards the engineering branch of the service, is gradually sapping its efficiency by killing the enthusiasm and contentment of the *personnel*, and by rendering it unpopular and unattractive in those circles from which the best class of engineer officer could and should be recruited. In these days, when engineering science is the very foundation of civilised existence, it is foolish and hopelessly futile to attempt to repress its professional representatives by any artifices of social or service convention. The evils attending the efforts of the Admiralty in his direction are growing in an increasing ratio with every development of engineering that increases its influence upon sea power. The variety, complexity, and magnitude, of the machinery employed upon modern warships renders it essential that those responsible for its care and manipulation shall possess high professional attainments, whilst the successful organisation and management of the large engine-room staffs now required call for administrative capacity of no mean order. It is surely unreasonable to expect that the well-bred, high-spirited and capable youths who are therefore alone fitted to become efficient engineer officers will willingly enter a service where they will be subjected to continual annoyance and humiliation, and where their ultimate grave responsibilities will be unaccompanied by corresponding powers of control.

There is a tendency on the part of some of the opponents of reform to make capital out of certain statements made by Rear-Admiral Melville (in his able and remarkably frank report for 1900, as the chief of the Bureau of Steam Engineering of the U.S. Navy) with reference to the unsatisfactory working of the new Personnel Act, by which the former Line and Engineer Corps of the U.S. Navy were amalgamated. There is, however, no justification for interpreting the words of Rear-Admiral Melville as a condemnation of the enlightened and liberal policy of which the Personnel Bill was the practical expression. In order to prove this point, I cannot do better than quote Rear-Admiral Melville's own words:—

> "I am fully aware of the futility and folly of decrying legislation simply because the desired results therefrom do not promptly materialise, but surely time enough has now elapsed since the enactment of the reorganisation scheme to make criticism of its effects upon the navy both proper and important. To any close observer it is convincingly evident that either the scheme was a mistake, or that the proper course has not been taken to carry out its intent.
>
> "I am free to acknowledge that the events of the past year have brought only discouragement to those most deeply interested in a successful outcome of this new law, *but I am equally candid in the belief that the cause of this discouragement lies not in the scheme itself, but in a lack of full appreciation on the part of the department (navy department) of the urgency of the need for haste*, not only in providing the fullest opportunity for the acquirement of practical engineering knowledge on the part of the younger officers of the former line, but in enforcing their embracement of this opportunity

> in the most effective manner by departmental orders. It will not do to depend upon unaided individual enthusiasm, or details occasioned by the necessities of particular ships, such a course merely temporises with the present needs, fails in any rational degree to increase the force of navy engineers (even should it suffice to replace the annual loss), and is hopelessly ineffective to secure the most desirable results in the shape of a speedy acquirement of general knowledge of engineering on the part of the new line as a whole."

And then further on in the report:—

> "Regarding the engineering departments of ships at sea in times of peace as well as of war, compare for a moment the advantage of a battleship depending for the full and proper operations of her motive power upon the knowledge of a single officer, the chief engineer, with that of another ship of the same class, whereon any one of the line officers could in an emergency take efficient charge of the machinery and staff, indeed, assume and completely fill the position of an expert in that department. The ideal condition of the latter is what we are now striving for, since engineering knowledge has been recognised as of the most vital importance in the service, and it is to the realisation of this I still hopefully look despite the many visible obstacles."

In reading Rear Admiral Mellville's valuable and lucid report, one cannot help feeling that it would be to the advantage of our public services, and therefore of the nation, if it were possible for the heads of our naval departments to make public, in the same complete, frank, and decisive manner, the results of each year's working, and the bearing which the experience gained had upon the creation of greater efficiency. One inestimable advantage attending such published reports lies in the fixing of the responsibility upon individuals rather than upon an unarraignable and intangible system. That the engineering difficulties in the Navy, with which we are now face to face, are typical and not accidental; that they are simply an acute and critical stage in a process of evolution, and not merely the outcome of certain special features of our naval administration ; is proved by the fact that the same difficulties are arising in all the progressive navies of the world. The U.S. Navy was the first to reach an acute stage of the trouble which, in the judgment of the very progressive and decisive American people, demanded the immediate application of measures for its redress. We appear to be the next to experience the grave dangers attending the failure to harmonise *personnel* and *matériel.* The others will undoubtedly follow in due course, and in view of the vast amount of world-wide attention which the whole subject is now attracting, progress is likely to be rapid, and we must take care that we are not left behind in the race for the acquisition of the enormous advantages which, in warfare, will accrue to the navy possessing the most efficient organisation.

The first step towards reform is a frank and intelligent recognition of the obvious fact that the great changes of the last fifty years, under which our warships have become floating machines, necessarily involve sweeping changes in the organisation and training of the naval *personnel.* The required standard of increased efficiency may perhaps entail some additional expenditure, but there are so many possibilities of effecting economies by means of reforms in our whole system of naval administration, that it would appear more than likely, that vastly increased naval efficiency could be obtained at an annual expenditure not exceeding that which is at present incurred for the maintenance of a navy which is in a chronic state of unpreparedness for actual warfare. In our dockyards, the cost of production could be greatly reduced, and enormous sums of money saved annually, by the erection of modern tools and equipment, and the adoption of an organisation and methods more nearly akin to those obtaining in the commercial engineering world, and which have been evolved under the law of the survival of the fittest. Some of the savings thus effected could be advantageously devoted to increasing the efficiency of the *personnel*, by offering the requisite inducements to the best class of men of all ranks and ratings.

To those who have the maintenance of our maritime supremacy at heart, it is satisfactory to note that, during the past few months, evidence has been forthcoming that the necessities of the case are being felt in some influential quarters, and I do not think it is too much to hope that the pendulum is about to swing. In support of this belief, I would quote the utterances of two distinguished admirals, whose opinions cannot but carry great weight in naval and administrative circles. Rear-Admiral Fitz Gerald, in the course of an able article, entitled "Training of Seamen in the Royal Navy," which he contributed to the *National Review* for June, 1900, makes the following significant statements:—

> "The navy has made great strides in the direction of becoming a mechanical profession since Sir Geoffrey Hornby's day. Almost everything is now done on board a man-of-war by machinery; manual labour is nothing; and the tendency is to increase the machinery, and to do nothing by hand which can be done by steam, electricity, or hydraulics. Not only the motive power, but the fighting power of our ships is all machinery.
>
> "In the old days 'Jack' could repair all ordinary damages himself, and by the exercise of 'his profession' he could keep the ship as a 'going concern' for many months, and sometimes for years, without falling back upon a dockyard. Now he has practically nothing to do with the up-keep of the ship, because it has nothing to do with what we are still asked to believe is 'his profession,' *and the ship can only be kept as a 'going concern' by the engineers, the E.R.A's, the stoker-*

mechanics, the armourers, the specially instructed electricians, and in short, by that large class in the complement of a warship which we may properly call artificers.

"These men and these men alone can maintain for one week, or for one day, the fighting efficiency of a modern battleship or cruiser, or even a torpedo-boat destroyer, and the consequence is that 'Jack' finds his general utility impaired because he is not a mechanic; his education has been faulty, and he has *not* learnt 'his profession,' so Sir Gerald Noel and some of his friends propose to improve his education by sending him to battle with the elements in an obsolete type of ship. This I consider to be illogical, because I see that 'Jack's' power to defeat the enemies of his country is entirely dependent upon his ability to manipulate skilfully various delicate machines (including the guns themselves), which require considerable mechanical knowledge and skill to work them to the best advantage.

"*Already the engineers are calling out for executive rank and executive titles. This is quite natural, as they see that they do most of the work, and that the maintenance of our modern ships in a state of fighting efficiency is the business of mechanics and not of sailors. I do not think the engineers will get their wish just at present, but this agitation is a sign of the times which must not be ignored;* and it is not difficult to foresee that unless our Executive—both officers and men—receive a more mechanical training than they do at present, they will be gradually ousted by the engineers and artificers. The law of the survival of the fittest is a universal one, and the Navy will be no exception to it. The 'sailor,' as we have hitherto known him, cannot survive long, as there is no place for him on board a modern man-of-war. Steam and

> machinery have battled with the elements, and defeated them far more signally than ever the 'Jack Tar' did in his palmiest days, and the caricature of him which we have been vainly striving to keep up for the last twenty or thirty years must now pass away.
>
> "I do not feel called upon to produce forthwith a cut-and-dried scheme for our future training service; but that a complete revolution in it, from the day the boys are first entered from the shore, is absolutely necessary I have no doubt, that is to say if we are to keep pace with the times, and not see ourselves surpassed by other and more intelligent nations while we are crying over spilt milk.
>
> "That the new training must be largely of a mechanical nature seems to me to go without saying, and that the manipulation of masts and sails can have no logical place in it ought, I think, to be equally obvious to all unprejudiced minds."

On the 12th of this month Admiral Sir J. O. Hopkins, G.C.B., communicated to the Royal United Service Institution a most important and pregnant paper, entitled: "A Few Naval Ideas for the Coming Century." It also cannot fail to be of deep interest to all interested in the great question which we now have under consideration, to read the following views expressed by Admiral Hopkins:—

> "And now let me touch on the vexed question of the position of the engineers, and suggest that the time has arrived to accord them executive rank.
>
> "Their duties are purely executive and should be recognised as such, and the recognition cannot, in my opinion, clash in any single instance with the other executives, as their sphere of duty is so clearly defined, and an

engineer would as little expect to be put in charge of the navigating or officer of the watch's duty as would these officers of being put in charge of the engines.

"Then as regards power of punishment for delinquencies committed by stokers in the engine and boiler-rooms. Why should not chief engineers have the same power of minor punishment allowed them as a commander, second-in-command, a first lieutenant, or, to quote an analogous case, a captain of marines for military offences, under the same restrictions as to quarter-deck investigations, etc? If this were permitted it would tend largely to improve the chief engineer's position and strengthen his authority. It also appears to me that the time is at hand to train a certain number of the bluejackets to stoke.

"Circumstances may arise in war time or seasons of epidemics when a long run at full speed cannot be maintained without assisting the engine-room party from deck, and then the advantage of the specially-trained sailor-stoker will be very conspicuous. As a coal trimmer also he will often be useful and obviate the present arrangements of picking up men for this duty haphazard and often unwilling workers. The men so trained to be paid a retaining fee as in other cases."

Such utterances from such quarters may be regarded as marking the birth of a new epoch in the history of the British Navy, and it is to be sincerely hoped that the younger officers of the executive branch will not fail to follow in the footsteps of those senior officers of high rank who, in spite of all the deterring influences of that conservatism and affection for the traditions of the past which are inseparable from age, have had the intelligence, courage, and honesty to recognise the fact that the old days are no more, and that new conditions demand new methods.

The time has, however, not yet arrived for any relaxation of effort on the part of those who have identified themselves with the active advocacy of reforms, rather is it necessary that yet more determined and sustained efforts should be made to stimulate the interest of the nation in the question, and to educate public opinion as to the facts and necessities of the case. I therefore appeal to the members of this and kindred Institutions, and to the engineers of this country as a body, to give their close attention to this vitally important subject, and to give expression to a collective and authoritative opinion, that cannot fail to impress the public mind, and materially assist towards the institution of those far-reaching reforms, which are absolutely essential if, on the eve of war, and in answer to the anxious enquiry of the nation, the Navy is to be in a position to cry "All's well."

Discussion.

The PRESIDENT said he would ask Mr David J. Dunlop to be good enough to open the discussion. He would only give one word of guidance. He should like members to concentrate their attention on the question of the manning of the engine-room, subordinating the part of the paper dealing with the social position of the engineer and his pay.

Mr DAVID J. DUNLOP (Member) remarked that he was certainly not prepared to open the discussion, but as the President had called upon him he would do so in a very few words. No one could disagree with the writer of the paper on the facts that he had brought before them, nor of their importance, in view of the present state of the Royal Navy. The questions of social position of the engineer and of his pay might be disassociated from the greater question of naval efficiency. The social position of the engineer was one that he created for himself, and both in the merchant marine as well as in the Royal Navy the engineer was generally found to be a man of retiring disposition—one who had not been able to assert himself when it came to be a question of uniform and its accompaniments. The engineers of the merchant marine were, however, satisfied with their positions, especially those who took charge of the larger steamers. Perhaps the engineer in the Royal Navy might be dissatisfied with the hidden position he was in a measure forced to occupy. If one reflected upon his duties and powers, which were not prominent except to the expert, but upon which the entire efficiency of the fighting machine depended, then that position should be altered, and the engineer raised in all respects to the rank and status he ought to occupy; while he should be given full control of the *personnel* for whose efficiency and discipline he was responsible. Undoubtedly the danger that the nation was exposed to by the inefficient manning of the engine-rooms was one that could not be too keenly taken up, and every Institution in the country should endeavour to make it a public question, so that it might be brought before Parliament for discussion, and the country enlightened as to the actual state of matters. The Belleville boiler was a case in point; it cried out for itself; but the engineer had not yet cried out for himself. The Belleville boiler had been listened to, and now they had a commission which would bring out very valuable information in connection with its adoption in the Navy. In his earlier paper, read at Newcastle, Mr Morison had referred to the engine-room staff of a ship of war of, say, 15,000 H.P. as compared with a merchant vessel of similar power; and the comparison revealed conditions with respect to the Navy almost impossible of belief. The Royal Navy was not run on economical principles, and it should not be; on the other hand, the merchant navy was run with the object of making money, and, roughly speaking, an Atlantic vessel of 15,000 H.P., doing hard work for six or seven days between Liverpool and New York, had nearly double the engine-room staff that the war ship of equal power had. That being the case: What would happen if our ships of war were called upon, not as the "Hermes" was called upon to go under easy steam, but called into active warfare? He did not believe there was a vessel in the Navy that would last a fortnight at sea doing her best, and that was not good enough. Our

Mr David J. Dunlop.

merchant steamers did their best from the moment of their departure till they reached their destination; and for the safety of the empire the ship of war should be as efficiently and as completely manned in her engine-room as the merchant vessel was. The want of practical education was another point, and any one who had had some little experience with the ordinary Scotch boiler, and was thrown all at once into a stokehold with Belleville boilers experienced a very great difference. Not only the difference in what he might call the science of firing, but the difference in the physical effects on the stoker, which he thought was even a point of more importance. Men had often to be taken out of a Belleville boiler stokehold who were unable to complete their watch through exhaustion; and to expect any one who had only lived on shore to take his place in a stokehold under the conditions with which the "Hermes" went to sea, was, he thought, scarcely to be expected; while nothing but the education of experience would prepare a man for his duties under the circumstances attending forced draught in closed stokeholds. He thoroughly endorsed all that had been so ably put by Mr Morison, and he ventured to hope that in the proper form this matter might take such a development as to call for the attention of our rulers in Parliament, and to put the country at ease on the matter. There was one more point that he thought a little attention might be given to, namely, the question of the subordinate position of the engineer at sea. Was that not equalled by the subordinate position that the department of engineering occupied in the Admiralty? He thought that it would be found that everything was subservient to the naval architect, and that the engineer, poor man, had to do the best under the conditions and circumstances that were left at his disposal by the superior body. Even on the question of bunkers, there were instances of which he had heard where it would take the whole crew of the ship outside and inside the stokehold to trim the coals required for full power, so scattered and so inefficiently had the bunker arrangement been provided for easy access and for easy trimming. He thought the subordinate position of the engineering department of the Navy should be coupled with the subordinate position of the engineer afloat.

Professor J. H. **Biles** (Member) considered that there was ample room for improvement in the engineering department of the Navy. There could be no doubt of the importance of this department, and, therefore, of the necessity of serious attention being given to the subject by all who were interested and believed in the existence of serious shortcomings. There seemed to be two questions involved:—(1) The absolute efficiency of the engineering department; and (2) the relative position of the officers of that department, and those of the executive, inasmuch as the relation affected the absolute efficiency of the former. It was to be remembered that the executive side of the naval service was not a democratic body elected by the suffrages of ratepayers, or even by the members of scientific societies. It was an institution which had its roots deep down in the dead past, while naval engineering was a branch which had grown upon the main stem at a late date of its life. The executive had been to some extent a preserve of the rich and powerful in the country, and any interference with its traditions and prerogatives was to a considerable extent a political question which might perhaps be better dealt with by political organisations than scientific societies; nor was it desirable generally to introduce the methods of political agitation to the meetings of such societies as this. It was, however, quite possible that circumstances might arise of great national importance in which even the calm of such societies should be sacrificed in the interests of national safety. This emergency in the opinion of Mr Morison seemed now to have arisen, though many who knew the Navy well were not disposed to agree with him. To understand the fundamental difference between the branches of the service it was necessary to remember that the executive was one in which the traditions of authority largely dominated individual actions. Young lads of fourteen were taught habits of command which were suited to those who were to become leaders of men in enterprises of daring, often of the rashest kind, but such habits were hardly

Prof. J. H. Biles.

consistent with the habits of thought and modes of action of an engineer, and it seemed in the nature of things that a different training was necessary for the two branches of the naval service. At any rate at present the training was very different and tended to produce, in the case of the executive, officers full of dash; in the other, a scientific officer trained to reflect, weigh, measure, and calculate before he acted. If the change which had been carried out in the American navy (the effects of which were not too favourably reported upon by Admiral Melville), were ever carried out in our Navy, it must first be preceded by the same comparative uniformity of early training which existed in that navy. In other words, he ventured to think that in considering the difficulty which now existed in the engineering department of the Navy in its relation to the executive, one should look to the very root of the matter in the difference of the training between the cadet and the engineer student. In the case of the former they had, at the age of 22 or 23, a lieutenant with considerable experience in his duties, one who had no friend such as Mr Morison to complain that after he had been specially trained for seven years or more by the naval authorities he was "of course quite unfitted for independent action and responsible duties," and "was quite devoid of that judgment, resource, and confidence which could only be created by long and intimate acquaintance with the machinery." Here was apparently the striking difference between the executive and the engineer officer as he was now produced. The one had learned to command—was resourceful and experienced in his profession; the other was not. The question of efficiency of the engineering staff seemed to become one of personal fitness due to training, as well as one of relative status and power to inflict disciplinary punishments. It seemed as if there was something radically wrong in the system of training which prevented the existence of homogeneity in spirit in the two branches of the service. Nothing could condemn the system more strongly than the fact that after seven years of exclusive service, devoted to special training, young men in the flower of their youth should be "quite unfitted for independent action and responsible duties." Was there not far too much time devoted to theoretical education which was useless to the large majority of men who had to spend their lives in taking care of machinery? Was so much more theoretical education necessary for the engineers of a war ship than for those of a merchant ship? Those who know both kinds of machinery could judge. He was disposed to think that some of those eminent engineers who constructed equally well engines for battle ships and merchant steamers had not had as much time spent on their theoretical education as naval engineer students had, and he was sure that those who took care of and kept the machinery of mercantile steamship companies comparatively free from trouble, had not been much helped by excess of that kind of education. He was aware that this was delicate ground to tread upon, but it must be remembered that while it was necessary to have as highly trained engineers as possible in the Navy, it was quite a debatable question as to how many such engineers there should be; and it was equally certain that it was neither necessary nor practicable to make all engineer students equal to the few men who were able and willing to benefit themselves and their profession by receiving and appreciating an advanced scientific training. All engineer students did not even become engineers in the best sense, still less did they become engineers who were valuable for scientific training. So much for the criticism of the training. He ventured to think that a change in the future, somewhat on the following lines, would greatly improve the efficiency of the engine-room staffs. Of the necessary number of mechanic apprentices or students who were entered in the dockyards each year, all should be sent to the respective workshops of the various trades connected with engineering for two years, at the same time they should attend school two afternoons per week and three or four evenings. At the end of that period as the result of examination in school and shop work, twenty-five per cent. (or some suitable number) should be retained at school for another year, the remainder to continue at their trades. At the end of the third year those who had remained at school, with others who

Prof. J. H. Biles.

chose to compete, should be examined and, say, two-fifths of them retained at school for a fourth year—the whole of the remainder being eligible to be sent to sea as junior mechanics in the navy, there to be trained in the engine-room and boiler-room as stokers, engine-tenders, and mechanics generally; their suitability for the different branches being determined by the engineer officers of the ship. Those found unsuitable for naval service might be sent ashore to the dockyard workshops, the remainder being gradually promoted to a large extent to take the place of the present engineers in the engine-room. Those who succeeded in remaining at school for the fourth year should be taken into drawing offices, or put on the better class of work in the shops, and at the end of the fourth year a certain number should be selected by examination and sent to Greenwich for the three years' course, similar to that given at present to the naval constructors and a small number of engineers. These men would, on the completion of their course, be passed at once into the Navy with rank similar to that of a doctor, and would be staff officers available for duty in the fleet, or on shore at the dockyards, or at the Admiralty. They, together with the engineers at present in the Navy, should form a corps of Royal Naval Engineers, admission to which in future would be by means of the Naval College three years' course, or by independent examination and recommendation of the best men who had passed into the Navy without having been at Greenwich. The remainder of the fourth year men should be sent to sea and trained as the others, but should have a step in rank given them a year sooner. This scheme was largely based on that for training officers of the dockyards, which was the one by which the naval constructors were trained and evolved; and it might be trusted to produce efficient engineers for the Navy and dockyards. The social difficulty, and the difficulties of command, would then exist as little in the Navy as they did in private life, which was all that any one who respected the traditions of his country could wish for. Whether that was the best state of affairs was a matter outside of engineering, and might safely be left to moralists and political economists. This suggestion was, however, one which could only do good in the remote future. The present pressing need was for more men of a kind who could be relied upon to take care of machinery. They could not be of the type of naval engineers with all the theoretical training which had been lavished upon them by the government, because that stock was limited to naval engineers. They must be men from the private service who would do ordinary engine-room duty as it was done in a mercantile ship's engine-room. With a staff of men such as these, the naval engineer could then act as the captain's representative in the engine department. He would supply the scientific skill and training necessary, while the working engineer would take care of the machinery. This arrangement ought to give what all wanted, and to which everything else must be sacrificed—an efficient engineering *personnel.* This question seemed then to resolve itself into improving the pay, status, and position of the rank and file of the engine-room, and giving the present engine-room artificers who were efficient, an increased pay and rank, and entering sufficient men from the private service to thoroughly man the engine-rooms with efficient engine-drivers, getting them upon the best terms possible, but by all means getting them. When the engineering department had been strengthened so that it could properly and completely take care of the machinery entrusted to it, the question of giving naval engineers executive rank, higher pay, gold rings on their arms, and other dignities and emoluments, should be settled by the Admiralty without pressure from outside. As an Institution they were, he ventured to think, justified in supporting Mr Morison to the extent of offering advice as to the education of naval engineers in the future, and as to the sadly wanted strengthening in numbers of the *personnel* of the engine-room, but beyond expressing a hope that the personal claims of the naval engineers should receive serious and favourable consideration, they were hardly justified in taking action on that part of the question.

Mr James Weir (Member) remarked that he did not intend to propose any radical change or new ideas regarding the executive officers in Her Majesty's ships; but he proposed to look backward and

Mr James Weir.

take a general view of how our ships were officered in the time of the old wooden walls. Every officer on board those grand old war ships commanded and fought his ship, because he thoroughly understood her. He knew exactly what her sailing and manœuvring qualities were, and on what they depended. He understood her propelling machinery—that was her masts, spars, rigging, and sails. He knew wherein lay both her strength and weakness, and the state of repair that all parts were in. He had learned to construct his machinery, and was therefore capable of directing his men not only how to work and fight his ship, but also how to keep her in repair, and to make good any damage when a breakdown took place. He was then a capable and competent officer. In those days the admiral was capable of efficiently filling any other officer's position on board, in both the navigating and fighting departments. Practical experience was his training, for he had served as an officer in every position, step by step from the post of apprentice boy upwards. That was the class of officer in the days of the old wooden walls, and they felt proud of him and his records. Surely it was not too much to ask that the naval officers of to-day should be kept up to the old standard of efficiency of knowing their ship from truck to keel, and be able to take the place of any man under their command. Conditions, however, had changed—the officer still remained to command a gigantic war-engine, propelled by steam-driven machinery, and steered by machinery; whilst in the armament of the ship there were torpedo machines; machine guns; guns, loaded, trained, and fired by machinery; and the shot and shell handled by machinery. Even the weighing of the anchor and the bringing of the captain on board were done by machinery. What did officers at present know about the vitals of their great war-engine? He did not think one could expect them to know very much, and they certainly would feel insulted if one said they were skilled mechanics or engineers. The expert knowledge of a mechanical nature in a war ship was delegated to that hybrid officer—the engineer; and on him was put the whole responsibility of keeping in efficient order and repair, and fit for action, the whole of the complicated machinery of our war ships. "The Engineering Crisis in the Navy" Mr Morison had shown to have been brought about to some extent by the machinery of the war ships crying out for more attention from officers and men, the hybrid officer system having failed. Petty prejudice and class distinction should be put aside, and common sense given a chance to bring back the Navy to the same high state of comparative efficiency it held to other navies at the beginning of the century; and to attain this all naval officers should graduate for duty in all parts of the ship—they should be able to take charge of the machinery in the engine-room as well as the machinery on deck, and, having the full executive power, they should take all the responsibility, and every mechanical civil position on board should be filled by promotion from the ranks of the workers and artificers on board. Tradesmen would then join the service with the position of chief engineer in view, and if this were done there would be no lack of engineers for the Navy, and by a short service system an efficient reserve of any number of men could be obtained. This change could be begun at once by giving the present engineer officers executive rank, and by the promotion of artificers to take charge of machinery. Also by training up all officers for the Navy to be efficient factors on board a war ship, by giving them a practical training for three years in the engine-room under the engineer. As a result of this training, added to their college and technical courses, a sufficient number of men would be found amongst them, taking for granted that the officers were men of average ability, to officer the engine department with men fit and capable to undertake the responsibility. By this system there would be three directors all in sympathy with one another, to take charge of the fighting, navigating, and engineering departments of our war ships.

Mr James Mollison (Member) observed that the subject Mr Morison had brought before them that night, and, as most of them knew, was so ably dealt with by him last March, at Newcastle, was one of great national importance, and he considered Mr Morison deserved great credit for the way he was following the matter up—

Mr James Mollison.

not only from the engineering profession generally, but from every unprejudiced thinking man who had the welfare and continued prosperity of the British empire at heart. The qualifications, education, and high scientific training required of naval engineers to fit them for their arduous and responsible duties had been so fully dealt with in the paper, and by those who took part in the discussion at Newcastle, that little more could be added to that part of the subject. For the last 25 years the position and status of the naval engineer had periodically been the subject of enquiry both in Parliament and out of it, but very little effect had been given to the claims put forward on those occasions, although they were admitted to be both reasonable and just. The question, therefore, which they had to ask was: How came it that successive Boards of Admiralty had so persistently refused or neglected to seriously consider the whole situation, embracing as it did the most vital interests of their first line of defence? Lieut. Norton of the U.S. Navy explained that his Government had practically introduced all the changes and improvements asked for in Mr Morison's paper. This certainly proved the far-seeing instincts of the American nation to secure and foster the best scientific skill their country could produce, which no doubt would enable it not only to create a powerful fleet of vessels, but to keep them afloat in the highest state of efficiency, and give a good account of themselves in any emergency. It had been mentioned that the status, or the want of proper official rank to the naval engineer, had its reflex in the mercantile marine. He could not illustrate this better than by quoting from a speech by Mr Carnegie, the Scotch millionaire, at the launch of a vessel at Grangemouth some little time ago. Speaking of the British shipping industry, he said: "He had crossed the Atlantic many times both by the British lines of steamers and by the North German Lloyd steamers. When he went into the dining saloons of the former he found the captain of the steamer sitting at the head of the table, but he never found there the chief engineer, the man who attended to the engines which were the soul and heart of the ship, and to the construction of which the country owed her supremacy; but when in the North German Lloyd steamers he found the chief engineer a scientific scholar, a refined gentleman, wearing the same badges and dress as the captain, treated with equal respect, with his table in the saloon, and introduced to all the distinguished passengers." There was a moral for Britain with regard to that little incident. Since Mr Carnegie uttered those words the supremacy on the Atlantic had been captured, for a time at least, by their Teutonic rivals. Mr Carnegie appeared to have formed a very correct estimate of the position which the educated scientific engineer should hold in a nation's economy, whether in peace or in war, and by the expression of such views, as opportunity offered, might very likely have assisted in bringing about the reform referred to by Lieut. Norton. Sir Fortescue Flannery in his letter said: "Reform must come, but hope so long deferred must have a very dispiriting effect on some of our *real* patriotic members of Parliament who have interested themselves in this matter, and who can rightly appreciate the danger likely to overtake the nation if much longer delayed." Sir E. J. Reed, Mr William Allan (who was one of the oldest members of this Institution) and others, had repeatedly warned the Admiralty of the danger, but they had failed to make any impression, or overcome the deeply-rooted prejudices and jealousy of that ancient institution. Now, however, that action was being taken by the Engineering Institutions throughout the country, members of Parliament should be backed up by such an expression of public opinion as would command the attention not only of officialdom at question time, but of Parliament itself. Then, and only then, he feared would the gravity of the situation be fully realised, and a long-standing grievance redressed. Professor Biles had referred to the educational side of the question, and had propounded a system by which naval engineers might be trained to something like the same efficiency as the deck officers. They knew that such institutions as he referred to had existed at Greenwich and Keyham for many years. If those institutions had failed to fulfil the object or purpose for which

Mr James Mollison.

they were originally intended by the Admiralty, he had an idea that the Government, instead of keeping them up, should give some of the endowment to the technical schools and colleges throughout the country, and thereby induce the best and cleverest of the young engineers who were being trained on the Clyde and at other shipbuilding centres to take a course of instruction at such institutions. That would be a decided step in the right direction. Mr Morison, in his Newcastle paper, seemed to think that engineers who passed direct into the naval service could not be so well equipped either in education or technical ability as if they had gone through the prescribed Admiralty code at Keyham. Now, if that were the case which he (Mr Mollison) very much doubted, the citizens of such centres of industry as Glasgow expected something different. He had always understood that the diploma of the Glasgow Technical College and the graduation in science from the University were quite equal to the standard set up at Keyham. He was sure that when reform did take place the engineering branch of the naval service would become more popular, and parents and others would have no scruple in encouraging clever and promising youths to qualify themselves for entering it, knowing that such rank and emolument as the importance of their profession demanded would be within their right.

Mr James Rowan (Member) remarked that two or three years ago he would have taken a good deal of what Mr Morison had said with a grain of salt, had it not been for a circumstance which came under his notice. This was the case of a young man who was just finishing his apprenticeship, when he joined the Navy—whether by examination or not he could not tell—but he knew that after the young man came back for a holiday, he told him that very soon after joining the Navy he was put in charge of a watch on board a battleship. His sea-going experience was such as a draughtsman might have on a trial trip when taking the cards, and the men under him knew far more about the machinery than he did. When Mr Morison was speaking, it occurred to him that while they were very severe on the Navy, and while they brought very serious charges, the question was: Were they the right men to tackle this subject? As engineers they might ask: Was their state much better than that which obtained in the Navy? He supposed that if they went a little further any person might make similar statements with regard to the Army. The Navy was about 300 years old, but the postal and telegraph system, which was managed by the same Government as managed the Navy, was an excellently conducted service. The one was modern, because the postal system was a little over fifty years old in this country—while the telegraphic system was of more recent origin—and the other was old. The one was well managed, and the other they considered not well managed. He would ask them to look at the engine-works in this country, they might take them to be fifty or one hundred years old, and if they compared them with those in Germany, which were perhaps less than twenty years old, or with those of America, which perhaps were less than twenty-five years old, it would be found that the workshops in Germany and America were infinitely superior to theirs. That was because engineering in this country was much older than in Germany or America. Mr Morison had made use of the expression "the system," but it was ingrained, and how they were to get quit of it was a puzzle. They had to get quit of it themselves, and while doing so, he thought that the Navy and Army would be able to do the same; and one of the methods to be taken was for each to attack the other party.

Professor A. Jamieson (Member) said that for four years he had been intimately associated with the Navy, more especially when he acted as chief electrician in connecting the various sections of the British squadron with Besika Bay, Constantinople, etc., during the Russo-Turkish war. He had at that time exceptional opportunities of studying the subject, since he not only visited several of the ships, but also stayed on board some of them. He had also had more recent intercourse with officers of the Channel Squadron. Twenty-five to thirty years ago many engineers were to be found who had risen from the ranks of artisans. At that

Prof. A. Jamieson.

time, however, the main engines and boilers were simple and easily worked in comparison with those now in use in the Navy, and the auxiliary engines were comparatively few in number and type. It was very natural for the executive officers to look down upon the engineers, and for young lieutenants and midshipmen to thoughtlessly snub them if they did not converse or conduct themselves in accordance with the naval code of etiquette. This conduct on their part, naturally tended to make the engineers reticent and careful to avoid social intercourse with the executive officers. Now that steam was fifteen to twenty times the pressure then in vogue, and the number and variety of engines was at present five times as many as they were thirty years ago, it was absolutely necessary to have, not only a more numerous staff, but some of the staff should be well-versed in hydraulic, pneumatic, and electric machines. Moreover, the chief engineer should have a scientific and practical knowledge of all of them. Notwithstanding all the suggestions that had been put before them, he was in favour of the following: —(1.) In each one of our larger battleships there should be a "captain engineer," who would be equal with and only second in executive rank to the captain of the ship. (2.) Every complaint, disorder, and "court martial," connected solely with his men in his own department, should be under his immediate supervision. (3.) He should be assisted by a "first lieutenant-engineer," who should also have executive rank. (4.) There should then be a staff of warrant-officer engineers, and finally the necessary complement of artificers and firemen. Professor Jamieson instanced a somewhat similar case, where the great Submarine Telegraph Manufacturing Companies, when engaged in laying Atlantic and other important cables, placed their chief electrical engineer, not only in full charge of his own men, but equal with the captain. These electrical engineers, not only wrote out their own reports, but also signed the charts along with the captain, and communicated directly with head quarters. Some such system would cancel the present unsatisfactory state of matters in the engineering branch of the Navy if combined with better pay. At present, the chief engineer in a large warship was often the most important person on board; but he and his staff seldom got due credit for their excellent work. He agreed with Mr Morison that this Institution should combine with other similar Institutions to bring to bear in a strong and harmonious way as great pressure as possible upon the Admiralty, in order that the suggested changes might take place as soon and as effectively as possible. By so doing, they would put the engineering department of the Navy on a higher status, and thus render it more attractive to our better educated young and efficient engineers. The Engineering Diploma of the Glasgow and West of Scotland Technical College was recognised a few years ago by the Admiralty, but the college found great difficulty in securing candidates for junior naval engineer appointments. Further, he could assure Mr Morison that the Glasgow Technical College training, when combined with a thorough apprenticeship, was quite equal to the training at Keyham.

Mr WILLIAM MORISON (Member) felt that Mr Morison was to be congratulated on the excellent way in which he had introduced this question. To a great many present it must have been both interesting and instructive, and he was very glad Mr Morison had brought forward so prominently the question of the number of men in the engineering department of the Navy, because that was showing up most prominently in the meantime. He thought that what Mr Morison stated, with regard to the causes of the mishaps which had occurred, was entirely due to the want of sufficient men in that department. It seemed to him rather humiliating that the French should be able to run their Belleville boilers without any trouble, while in the Royal Navy they were having trouble all the time, and, as far as he could understand, in the merchant service—it was so in the Messageries' boats—it was the practice to have a squad of men who did nothing else but go over the boilers to clean them out and keep them in order. Men deducted from the stokehold complement of the "Hermes" for such a purpose would cripple the staff very much. Most of the contractors' trials had been carried out with a fair degree of success, and the men

Mr William Morison.

in the engineering department employed on those trials, who were working the boilers, had to be trained to the Belleville boilers; they knew nothing about them before the boilers were put on board. The trials had been gone through, which showed that it was not such a difficult thing to overcome the mere working of the boilers, but when men were required to do more than was absolutely within their power, trouble was sure to follow. He thought that if these points were urged as being important, the other points which Mr Morison brought out in his paper, read before the North-East Coast Institution of Engineers and Shipbuilders, would be sure to follow.

The PRESIDENT said that he had intended to call upon one or two other gentlemen, but it was so late that he was afraid he must not do so. It was also necessary, on account of their further engagements this session, to close the discussion that evening. He thought Mr Morison must be satisfied from the discussion, that his paper had raised very keen interest among the members of the Institution. He would like to explain to Mr Morison that some little time ago, after his paper had been read at Newcastle, a communication was received from the North-East Coast Institution of Engineers and Shipbuilders, asking them to co-operate with that Institution in a way that would appear in the resolutions which he would read.

The resolutions which were passed at the North-East Coast meeting were as follows:—

Resolutions Passed at the Closing Business Meeting of Last Session, May, 1900.

1.—That in view of the national importance of an investigation and discussion by engineers of the subject matter of Mr D. B. Morison's paper, on "The British Naval Engineer," the Secretary be instructed to communicate with the various Marine Engineering Institutions throughout the Kingdom, enclosing a copy of the paper and discussion, and suggest that each should hold a Meeting for the discussion of the subject; that all discussions should be incorporated in one volume, such volume to form part of the transactions of each Institution.

2.—That a small Committee be formed by each Institution, the whole to be embodied in one General Committee which will draw up a report for submission to the Government as representing the opinions and recommendations of the Marine Engineers of the United Kingdom with reference to the Engineering personnel in H.M. Navy.

3.—That the following gentlemen be elected to form the Committee to represent this Institution:—Sir B. C. Browne, Sir Thos. Richardson, Mr D. B. Morison, Mr H. Withy, Mr T. Westgarth, and Professor R. L. Weighton.

So far as this Institution was concerned they wished to hear Mr Morison himself, so that they would have something to go upon arising out of their own proceedings. The Council had held this communication over, but it would take up the whole question at the next meeting and deliberate upon it. He would now formally move a hearty vote of thanks to Mr Morison for his paper. He did not think it was necessary to call upon him to reply to the discussion, as he did not know that any questions had been put to him on the subject of the paper. At the same time if Mr Morison felt that there were any points that had been raised in the discussion that he would like to reply to, they would doubtless be very glad to hear him.

The vote of thanks was carried by acclamation.

Correspondence.

Mr A. **Denny** (Member) thought this subject was not entirely suitable to discuss before a scientific society such as theirs, while at the same time he realised Mr Morison's difficulty in having the matter ventilated otherwise, and the reason which had prompted the Council to receive his paper. He did not think it suitable to

Mr A. Denny.

discuss the questions of pay and rank, but the education of the engineer might well be discussed, and in his opinion this was at the root of the whole matter. He had not the slightest desire to disparage our naval engineers, quite the contrary; he did not hold them in the least to blame for the position of affairs, the position was thrust upon them, and therefore he would ask them to believe that what he said was not in a spirit of fault-finding, but with a real desire to help. He had had the advantage of attending the Royal Naval College at Greenwich for three years, and of sitting alongside the engineers and naval constructors who were trained there. Some of the work which was then done at the Royal Naval College was now done at Keyham, but otherwise the training he understood was similar, and he thought it over-educated the men on the scholastic side. No one could deny that the British mercantile marine was not only the best managed, from an engineering point of view, in the world, but was also quite satisfactory and sufficient. The engineers of the mercantile marine, as a rule, served five years apprenticeship in an engine-shop; the best of them, if they had any higher education than the ordinary schoolboy acquired, had obtained it at evening classes during their apprenticeship, and but few of them had any knowledge of higher mathematics and theoretical mechanics, yet steamers manned by these men were running with the utmost regularity. From their ranks were drawn practically all the surveyors of the Registration Societies and of the Board of Trade, and further by a gradual process of selection, the superintendent engineers of our great lines who had done so much for the improvement of marine engineering. Many of these gentlemen were members of this Institution which had benefited by their ripe experience and sound knowledge. He thought they would be the first to admit that the ordinary driving of an engine did not call for the very highest intelligence or the most brilliant mathematical training, but that those who turned out the best practical engineers were rather born to it than made, and that for the skilful management of an engine and an engine crew, there was rather an inborn

Mr A. Denny.

knowledge and tact required than any scholastic training. He did not believe that the machinery on board of a man-of-war was vastly more complicated or much greater in extent than on board of high-class passenger ships, and he was sure that the same class of men who manned the mercantile marine would be equally competent, with the same length of training, to take charge of our naval engines, so far as the running of them successfully was concerned. But on a warship, in addition to the mere driving of the engine, there was also the higher discipline exacted on board, to acquire, and from the naval engineers must come chief engineers and their assistants, inspectors, and Admiralty staff, and he thought, therefore, that while the training of the naval engineers should be similar to that which obtained in the mercantile marine, there should be opportunities offered to the few of those who proved themselves to be the best men of a higher training on scientific lines. His idea then was that the training of the naval engineers should be very similar to that pursued in training the corps of naval constructors. All apprentice engineers should work in a shop as ordinary apprentices, and should either have, say, so many hours a week study, or better still so many months continuous study in the winter, working exclusively in the shops during the summer. At the end of a year, by examination, there should be a large weeding out of those who were not likely to shine in a scientific line, but in this weeding out, a large figure of merit should be given to those who showed great practical ability in the shops, so as not to have the higher grade drawn exclusively from book men. Those who failed to reach a certain standard at the end of the first or second year would then complete their apprenticeship exclusively in the shops ; the remainder would get a further scientific training, and at the end of the third, fourth, or fifth year, would be further weeded down to the number, say of half-a-dozen, or more, which it would be necessary to train year by year to replace the waste in the very highest grade. A lad joining at 15 or 16, which was soon enough for a boy to begin hard work in the shops, would then, at the age of 20 or 21, have had an excellent practical training, good

Mr A. Denny.

education, and would be ready for sea work, or for the Royal Naval College, as the case might be; but his sea work should be precisely the same as that for an engineer of the mercantile marine. Now he would be at once met by the reply that he was degrading our Royal Naval Engineers to the rank of artificers, Well, that was a matter of opinion. It was no degradation for a man to learn the practical duties of his business, and he did not think it any advantage for a man to begin his work with kid gloves on. All the engineers should go through the rank of artificer, or rather should do the work artificers were now doing. Those apprentices who were put exclusively to the shops, after, say, one or two years of study, would form the back-bone of the artificer grade, others who, while they failed to pass into the Royal Naval College, would receive the further scientific training during apprenticeship and would form the bulk of the corps of Royal Naval Engineers; while those who passed successfully through the Royal Naval College would form the bulk of the fleet-engineers, inspectors, and Admiralty staff. But there should be nothing to bar the artificers, that was the young men who did not pass the first examination, rising to the grade of engineer, and there should be nothing to bar the second grade, namely those who failed for the Royal Naval College, to rise to the rank of fleet-engineer, inspector, or to the Admiralty staff. If it were found from the point of view of "discipline" inadvisable to mix the second grade with the artificer grade, then certain vessels might be selected on which all the artificers would be in training for engineers, and he thought it would be very valuable if all or some were trained on fast mail-steamers for a short time. Some might say, what you propose was very much what was done at present. So it was to a certain extent, but what was lacking just now was a thoroughly practical training, and he postulated a less high scholastic training which he held to be unnecessary for the bulk of engineers. An engineer would then rise through the various grades of artificer, or artificer engineer, if he might be so called, watch engineer, assistant chief engineer, and chief engineer, and finally to fleet-engineer, etc. It was probable that the Government Dockyard Engine Works would not be capable of supplying sufficient engineers, but a training college might be established in all large engineering districts, such as the Clyde, the Tyne, Liverpool, London, and Belfast, where the scholastic part of the training during the five years' apprenticeship might be undertaken, say, in the months of November, December, January, and February; while it might be made a condition of being on the Admiralty List that engineering firms should allow the naval engineer apprentices to work in their establishments during the remainder of the year. In the largest type of warship the staff should be roughly one chief engineer, two or, at the very most, three assistant chief engineers, of whom neither would keep a regular watch. There should then be three or, at the very most, four watch engineers who would keep regular watches, just as was done in the mercantile marine, and as many artificer engineers or artificers as were required to make the complement quite sufficient—say on a par, excluding the chief and his assistant chiefs, with mercantile marine practice. The watch engineers would be absolutely responsible for their watch as on board of a merchant ship: they would be responsible to the chief engineer, and through him to the captain, and to the captain alone or to his locum tenens when absent from the ship. The chief engineer should be responsible for the discipline of his department in every detail, including drill of all kinds, etc. The limits which he had set himself in regard to the discussion of the other subjects prevented him from going further. If some such scheme were adopted, supply and demand and ability would settle all the other questions, but at present a young engineer fresh from the college was in a most anomalous position; his book learning had been perfectly attended to, but he knew less than a junior artificer of the actual work of the ship. That a man worked with his hands should have no effect whatever upon his position as a gentleman, rather the reverse, and the feeling of full confidence in one's own ability to control one's department gave a man a

Mr A. Denny.

position which he could not otherwise have. He regretted that the limits he must necessarily put upon his remarks from the position of this Institution might lead to misunderstanding, but he must put up with that, and only ask the engineers to believe that as a practical workman himself they had his sympathy in their position.

Mr Henry M. Napier (Member) while complimenting Mr Morison on the able way he had treated the subject, thought that he rather emphasized a secondary issue. Efficiency of the Navy was the all-important point. Mr Morison brought out very clearly that a battleship, cruiser, or any war vessel of the present day was a huge collection of mechanical appliances, and further, that there were not sufficient officers possessing the necessary knowledge and experience on board the vessels of the Navy. Under the present system a few consecutive days and nights of hard work, such as might readily happen in time of war, would make a complete wreck of the whole staff of officers—the naval men from casualties and anxieties, the engineers from overwork. Many naval officers thought engineering matters beneath their dignity, though their daily duties necessitated the use of mechanical appliances of all descriptions. This should not be, and the Admiralty should exert every effort to eradicate this false pride. What was wanted, was that every cadet, in addition to his training on the "Britannia," should go through a course of engineering both theoretical and practical, and that naval officers should keep in order and be directly responsible for all the machinery of the vessel outside the engine- and boiler -rooms. The American system, as described by Lieut. Norton, U.S. Navy, would solve the difficulty, but whether that was adopted *in toto* or not, every officer afloat should be at least a bit of an engineer. That the position of the engineer officer was not as it should be, nor were there sufficient of them, was evident, and it was incumbent on the Admiralty to put matters right without delay and so attract young men of the right sort and in sufficient numbers.

Mr F. J. Rowan (Member) observed that there could be but one opinion amongst engineers that the case which was so ably stated by Mr Morison in his two papers was complete, and the statements which he had made regarding it were absolutely convincing. The facts were unfortunately only too patent, and they were too well set forth by Mr Morison to gain any force by reiteration. As they embraced the rank, the status as regarded executive power, and the pay of naval engineers, it was manifest that the matter could not be considered as satisfactorily settled until all of these were adjusted. It seemed to him that they should direct their attention to possible measures of ultimate remedy for, and present amelioration of, the grave state of matters which was proved to exist, so that a scheme of policy might be put before the authorities and the country. There were two points which should be kept prominently before them in considering how they were to move in the matter, and these were (1) that, as indicated by Sir J. O. Hopkins, the Admiralty authorities must be moved to action by pressure from outside; and (2) that the question of naval engineers was a national one, and should be kept distinct from all political or party considerations. If the matter were simply raised by question in the usual way in the House of Commons it was probable that they would merely see another Admiralty committee like the one noticed by Mr Morison, which did not embrace any engineering representation although it was constituted to deal with an engineering question; or one like the committee proposed to the House of Commons to deal with the question of Water-Tube Boilers in the Navy, which (as had been publicly pointed out in the House and by letter in the *Pall Mall Gazette* of 7th September, 1900), did not contain one member (except the naval engineer) who was experienced in water-tube boilers. A committee to decide upon an expert question without experts! If a committee, or a Royal Commission, to deal with the subject of the engineering force of the Navy was to be appointed, it should undoubtedly consist largely of engineers, and a portion of its members should be nominated by the leading Engineering Institutions—the Institution of Civil Engineers, the Institution of Mechanical Engineers, the Institution

Mr F. J. Rowan.

of Engineers and Shipbuilders in Scotland, and the North-East Coast Institution of Engineers and Shipbuilders. It would be only right to exclude engineers and naval architects who were connected with Government departments and also Admiralty engineering contractors, as being almost necessarily interested in supporting the attitude of the department. Some such machinery, for dealing with the existing crisis immediately, was surely required, but it would probably be a good thing if a permanent engineering committee existed containing members unconnected with the naval department, which could advise and deal with such questions as well as those of new designs of machinery. In 1876 he suggested, in a discussion on boilers for high pressure at the Institution of Civil Engineers, that such a permanent committee on designs should be formed, and he ventured to think that if it had existed the water-tube boiler question would not have reached its present state of muddle. Such a committee should undoubtedly adopt the excellent suggestion derived from American practice, and make a public yearly statement of progress and its bearing on increased efficiency. No doubt many plans would be suggested for bettering the position of the naval engineer. Yet on the face of the matter, although the commander and the navigating officer for the time being must be supreme on board ship, there did not seem to be any reason why the chief engineer should not rank as captain and his subordinates as lieutenants and warrant officers, somewhat on the lines of the Army Medical Department which supplied an illustration of existing executive rank combined with special duties. Objections as to the want of administrative ability in the chiefs were of little consequence. The standard of education and training fixed for the engineering staff was at least as high as that for the executive, and was a guarantee that the engineering officers were men of as good position and ability. The scheme of training at Keyham was an ideal one, and the pity was that the Admiralty had not held out inducements to attract large numbers of young men to it. Its extent and cost were such that only those of good position and education could enter for it, and it was certainly too much to expect such recruits when their reward was to be relegated to a totally inadequate position and pay. As long as the dearth of trained naval engineers made it necessary to appoint emergency engineers who had passed in the mercantile marine, it was probable that a slightly lower grade in rank should be awarded them, at any rate until after some years' service. This would probably be no drawback to such men joining, as the position, pay, and pension would attract them. But as a means of insuring a useful stand-by in case of sudden pressure he suggested the formation of a naval engineering reserve amongst the engineers of the mercantile marine, those joining it having to serve some time on board vessels of the Navy, and to have periods of training somewhat like the men of the Royal Naval Reserve. This would at any rate be better than an attempt to teach naval executive officers engineering duties. One thing was clear, namely, that the present state of affairs could not continue. In the Army the engineers stood at the head, but in the Navy where they occupied a position more vital to the efficiency and success of that great arm of national defence, they stood nowhere that was intelligible, and this called for a remedy immediate and adequate.

Mr GEORGE M'FARLANE (Member) thought that the paper which Mr Morison read before the North-East Coast Institution of Engineers and Shipbuilders, and the discussion which followed, had entirely covered the ground of the subject; but Mr Morison had been able to lay before this Institution a new paper, containing much new matter, and had thereby offered the opportunity to its members, of further discussion. He had had the opportunity of speaking at the Newcastle meeting, and he would only say a few words on two points which occurred to him, *first* with regard to the system which prevailed in the U.S. Navy of amalgamating the deck and engineer officers. This system appeared to the casual observer to be one which might be followed, and which would get over many difficulties, especially the branch difficulty, which would cease to exist; but the scheme would not stand minute inspection because of its impracticability. Engineering

Mr George M'Farlane.

comprised so extensive a field, that it could not possibly be treated in the indifferent manner suggested by certain executive officers. Some knowledge of navigation, gunnery, or torpedoes could be, and undoubtedly was, obtained in two years, but many years could be devoted to engineering without any great result. It was equally impossible to look at the subject from the other point of view in which engineers would eventually take command, as executive officers' duties could only be mastered after long and continued experience, including, as they did, the handling of a ship or squadron, and fighting the same, and also diplomatic duties, national etiquette, and other specialities. The amalgamation would necessarily result in naval officers becoming Jacks of all trades and masters of none, and experience in the American Navy, under these conditions, had shown, as was to be expected, that even higher pay with equal rank was insufficient to induce lads to choose the life of an engineer, when that of a deck officer was open to them. The fighting of a ship was altogether a different business from that of running her machinery, but the Admiralty did not seem to recognise this, as they allowed executive specialists, with no engineering training, to dabble as amateur engineers, and consequently a great amount of overlapping of duties occurred. For example, the torpedo branch had charge of all motors employed for the various purposes on board, while the engineers had charge of all dynamos and generating plant, and were expected to have a knowledge of all electrical machinery. An electrical engineer should be primarily an engineer, with his knowledge applied to this special branch of engineering, and he could not too strongly condemn the system of putting motors under the charge of seamen who possesed a smattering of electrical knowledge, but no engineering knowledge whatever. He believed an effort was being made to run capstans, gun-working gear, hoists, etc., by electric motors, which would all come under the charge and care of this branch, and would tend to further overlapping and trouble. He did not think it possible that boys could be trained together up to a certain point, and could sort themselves out with advantage, some to be engineers and some to be deck officers. The conditions of the deck officers' life were more attractive to the young mind, and naturally the greater number chose it, and as this privilege was given to the ablest lads, the remainder were sent to the engineering side. To enable a man to handle a squadron, or even a battle-ship, his life required to be spent in an atmosphere permeated with ideas on seamanship. An executive officer had lived in this atmosphere from the beginning of his education, and even if he was not over clever, would ultimately learn in the living. The question of international etiquette, and kindred subjects, required the same course of training and long experience to learn, and as the engineer had no opportunity of learning, he could not become capable, and this pointed to the fact that it would even be better to put executive officers in the engine-room than engineers on the bridge. In his opinion, the realisation of the scheme formulated by the engineer officers themselves, and set forth in Mr Morison's (Newcastle) paper, could not be bettered; the only solution of the trouble was the formation of a corps of Royal Naval Engineers, whose position, rights, and privileges were distinctly recognised. The root of the whole matter, however, lay in the want of adequate engineering representation on the Board of Admiralty. The modern war vessel might be described as an engine of war, seeing that the whole of her functions required engines of some kind for their fulfilment, and still the Admiralty had no engineering representation on its Board. With an adequate engineering representation, not only would the designs of vessels be materially improved in regard to sufficient weight and space for machinery being allowed, but the *personnel*, and all other engineering questions, would receive the fair and unprejudiced consideration, to which, from their importance, they were entitled. It was to be hoped that the various engineering associations in the country would take this matter up, and that a strong and clamant demand would be made by the representations of engineering opinion throughout the land, that this branch of the Navy should be set free from the bondage

Mr George M'Farlane.

in which prejudice had so long been able to hold it, and that it should be placed in the position to which it was justly entitled.

Mr J. D. M'Arthur (Member) considered that Mr Morison deserved to be congratulated on the able and comprehensive paper he had produced. It ought to be widely circulated and studied, not only by engineers and shipbuilders but by all who had the interest of their country at heart, exposing as it did one of the chief defects in the administration of the Navy. To those who could realise how much a warship's powers of offence and defence were dependent on the prime agent steam, and on the engineer for their maintenance in an effective state, the subject was one which assumed grave importance, and there could be only one voice with which to express their opinions concerning the need for early reform. The position of a naval engineer, as at present defined, was anomalous and unenviable. His duties required him to be a man of practical skill, technical knowledge, and administrative capacity. The course of training was more expensive and longer than that of the executive or medical branches, to say nothing of the clerical, and demanded a brain-power second to none of them; yet the position of the engineer was relatively the lowest of the commissioned ranks both with respect to status and pay. He had a number of men under his command —and that was a sore point—of the roughest class to be found on board ship, yet he had no direct authority whereby to enforce his commands; but must either ignore breaches of discipline or take the equally undignified course of appearing with the culprit before the executive officer. He was even denied the remedy open to his *confrère* of the merchant service which was frequently made use of—that of making a law unto himself. In this as in all other dealings with the engineer (from the engineer-in-chief downwards), the Admiralty authorities seemed to have taken great pains to obliterate his individuality in every possible respect, but surely due recognition of his importance and that of his department could not be delayed much longer. At present the naval engineer was in many respects worse off than the merchant service engineer. For instance in the matter of Courts-martial the bench was composed of officers of executive rank only, even when trying a purely technical charge; on the other hand, when the marine certificated engineer was tried for neglect of duty, engineer assessors were appointed by the Board of Trade. Also in the merchant service the chief-engineer could submit his report to his superintendent or owners as the case might be, without the master being aware of its contents, while in the Navy the report could only be made to the commanding officer of the ship, who transcribed it in his own words before forwarding it to the engineer-in-chief, to the entire extinction of the engineer except when blame fell to be apportioned. A realisation of these points alone made one cease to wonder at the unpopularity of the Service, and the adoption of such expedients for procuring men as "direct entry" and "temporary service.' Even these expedients had failed in their purpose. The extent to which undermanning existed, as shown by the comparative statements published, was sufficiently alarming, and must appeal directly to those who were in a position to understand the more arduous nature of conditions under which the engine-room staff performed its duties on board of a warship, even if it were numerically equivalent to that of a liner. The patriotism of the marine engineer need not be doubted, but with all due deference to the profession, of which he had the honour to be a member, there was such a thing as placing too high a value on his services in the event of war. Even should sufficient numbers be available without depleting the merchant service of its best men, the bulk of the machinery on board of a warship would be entirely strange, as well as the conditions of life and discipline, and two or three months would be spent before even the smartest could claim a fair acquaintance with their duties. On that account also, too much prominence should not be given to the reserve of engineers. As had been pointed out by Lieut. Norton, U.S. Navy, and the anonymous American engineer who had written such an interesting contribution, all that British naval engineers asked for, and more, was granted to their brethren across the water years ago.

Mr J. D. M'Arthur.

The proposals they had put forward could only be characterised as extremely moderate, and now that the ball had been set rolling it should be kept in motion till a satisfactory result was attained, and that branch of the Navy placed on a sound basis of efficiency. Apart altogether from a feeling of resentment at the unfair treatment of these professional kinsmen, whom Kipling described as "infinitely patient, resourceful, and untrained—the king-pin of their system," it was our duty as citizens of the empire, whose existence so largely depended on the efficiency of the Navy, to spare no effort towards the achievement of that end.

TEMPORARY WORK ON THE CANADIAN PACIFIC RAILWAY.

By Mr J. Grant MacGregor (Member).

SEE PLATE II.

Held as read, 18th December, 1900.

GENERAL REMARKS.

The history of the construction of the Canadian Pacific Railway has been so ably recorded by its pioneers, in various papers to kindred societies, that a review of all the characteristics of its earlier development will be unnecessary within the scope of this paper. The following notes will therefore be confined principally to a description of the temporary work employed during construction, and its relation to the more recent permanent work, with the view of illustrating as far as possible the conditions affecting the construction, and the operations peculiar to the maintenance, of what may be termed a pioneer railway.

The term "Pioneer," as sometimes applied to American railways, implies that the railway has been projected with the view of opening up a new territory for colonisation purposes, and that in its construction all due regard has been had to economy in first cost, so that the expenditure made may be justified by the prospects of the country being speedily settled and a revenue made available to the promoters from the development of its natural resources.

The maintenance, however, of a railway built on this principle, in order to meet the requirements of increasing traffic and modern equipment, must necessarily form an important factor in its future development.

Unlike the conditions existing in countries that are fully settled, the demands of a partially settled country like Canada, necessitate the adoption of the principle of economy in first cost, a principle that proved so beneficial in the earlier days of pioneer railways in the United States, where similar conditions prevailed.

Nevertheless, it would be folly to conclude from this that the American practice of building cheap railways, where timber as a natural product is so largely introduced into their construction, could be adopted with economy in all new and undeveloped countries. So much depends on the deteriorating effects of climate, cost of transportation of material and the adaptability of the natural products available, that it is only from a careful study of these conditions—with the rate of future development and cost of maintenance in view—that the most advantageous plan can be adopted.

North America is, of course, specially favourable to the construction of cheap railways on account of the great quantity of fine timber available, which is extensively employed in the building of trestles and other temporary works. In hilly country where extensive bridging is necessary, timber, as a rule, is plentiful and the cost of haulage low. On the prairies, where timber is more difficult to procure, it is not so much required on account of the favourable nature of the ground. Natural facilities such as these, together with the large proportion of line traversing flat country, go far towards reducing the average cost of pioneer railways in North America.

The greater number, however, of the more important works carried out during the construction of the Canadian Pacific Railway, were of a more permanent character than what is usually adopted on American railways. Where circumstances were favourable it was always deemed necessary, in the interests of future economy, to build the permanent structures at the outset, and this was done in the form of many fine examples of masonry and steel bridges.

A great part of the original permanent work in British Columbia was carried out by the Government, and, as experience has since proved, much unnecessary expenditure was made on these structures where economy in design and arrangement of space were not carefully studied. This fact is admirably illustrated by Mr P. A. Peterson, chief engineer, in his presidential address before the Canadian Society of Civil Engineers at the close of session 1894-95.

During construction timber was chiefly employed in the building of temporary trestles, with the view of avoiding heavy embankments, where suitable filling could not be procured at a convenient distance. The saving thus effected was considerable—the cost of trestlework being frequently as much as from 30 to 40 per cent. less than an embankment, and at the same time the construction of a costly permanent structure, where an opening or waterway was required, was avoided. Indeed in many cases it was considered unadvisable to construct permanent openings and embankments, as changes in location are sometimes found necessary after the lapse of time, when a bettter knowledge of the topography of the surrounding country is obtained. As the forests get hewn down, and fire performs the finishing touches by sweeping away the underbrush, many errors in the original location might be detected.

In some cases it was actually found more expedient to build temporary trestlework, and fill in immediately afterwards. In such cases the filling was done from a train of flat cars, with plough and cable attached to the engine, and not infrequently the material had to be taken from some distant point ahead of the side to be filled, the trestle in the meantime serving as a temporary bridge. This method was adopted more particularly where the line crossed a swamp, or shallow water along the lake shores, and where the country was flooded during the season at which operations had to be carried on. In the case of a swamp the piling gave additional stability to the embankment, and enabled it to settle gradually as the timber decayed; and although this was perhaps not always the object sought, it avoided much loss of time and disappointment afterwards,

Another advantage derived from the uses of open trestlework is, the longer time afforded for carefully ascertaining the class of structure most suitable, and the size of opening required for a permanent structure, with the necessary protection against flood and ice.

The climate of Canada renders precautions of this kind necessary especially in a territory practically unexplored. In deciding on the structure best adapted to the situation, and the size of opening required, a good deal depends on the information available regarding the flood season, for what at one season of the year seems a peaceful valley or ravine, with a small rivulet trickling down its bed, may at flood season develop into a raging torrent several hundred feet wide, carrying ice and timber in large quantities in its course, The volume of flood water during spring does not altogether depend on the amount of snow or rainfall, but is influenced more or less by the peculiar nature of the Canadian winter. The flood season following an open winter is, as a rule, the most disastrous. This is evidently brought about by a series of thaws occurring during the earlier part of spring, removing and depositing large quantities of ice along the water courses and enabling more ice to form—finally blocking up the channels, and causing abnormal ice shores.

Observations necessary for obtaining data relative to volume of water at the flood season will consequently extend over a period of years, in the absence of information gleaned from old inhabitants or traces left by previous floods. In order that this information may be available when the question of building a permanent structure arises, the section foremen are instructed to note the highest water each year by a permanent mark on all bridges on their respective sections.

Pile trestles of the class shown Figs. 20-22, Plate II, have been known to resist the ravages of flood and ice much better than more costly structures consisting of framed bents, or even crib piers with cut-waters. The pile trestle, however, can only be adopted with advantage where the bottom is of a suitable nature for piling. Where the cost of substituting a permanent structure for this class is great, on account of the foundations, the temporary structure is maintained at a comparatively small cost for many years. New piles are driven midway between the old bents, and the superstructure replaced without any serious interruption to traffic. It is only practicable, however, to employ this class of structure where the height does not exceed 25 or 30 feet, on account of the greater length of pile required. Where the height exceeds this limit, and the bottom is of a soft nature, it is customary to arrange the piles to be cut about two feet above the ground, and capped to form a sill for a framed bent of the class shown, Figs. 15 to 17.

Much controversy seems to prevail sometimes as to the best method of carrying railways across "muskegs" or swamps, where a high embankment is required. Of course the pile trestle has always been resorted to as a ready method, but it can only be regarded as a temporary expedient and it is costly to maintain. It is not the intention of the author, however, to go into this question exhaustively in the present paper, but from observations of the several methods usually employed, it would appear that a great deal depends on a previous knowledge of the nature and composition of the underlying material. For example, in the case of a peat bog, where there are ample means of draining the water off, it appears that the method that has proved most satisfactory is that by which the crust or natural surface is preserved, and the superincumbent weight equally distributed over the largest possible area during the filling. This is frequently effected by what is known as "cross-logging," or forming a mattress of cedar logs over the entire area to be covered by the embankment. In doing this care must be taken in placing the logs so that the ends shall not all butt in line. The author observed an instance of where two lengths of logs were placed in position with the ends all butting in line at the centre of the embankment. This had the effect of breaking the crust at the centre, and tilting the logs up to form a V-shape. The side ditches are usually placed as near the foot of slope as possible, it being found that when they are placed at a greater distance than 8 or 10 feet away the crust will not yield uniformly with the weight of the embankment.

Where the situation is of a less favourable nature, and the material to be dealt with is composed of mud or quicksand of great depth, nothing has proved more effective than trestle work or rock filling; but the latter being expensive work it has not been adopted except where the rock had to be excavated from a cut or tunnel in the immediate vicinity.

An attempt was made some time ago to fill in a trestle 1800 feet long, in a bay at the south end of Lake Memphremagog, with ordinary material consisting of loamy sand and clay. The bottom of the lake consisted of a depth of 20 feet of mud, the surface of which was 18 feet below water level. The work was carried out successfully, except that the quantity of filling was greatly in excess of the estimated quantity. Much of the material was evidently lost in floating away and combining with the yielding mass of mud. Had the material selected for the filling been of a less absorbent nature, such as pure sand and gravel, the work could no doubt have been done more satisfactorily and at less cost. The form which the embankment assumed when completed is shown by the cross section, Fig. 1*a*, which was prepared from soundings taken at various stages of the work, and borings made after completion.

From the author's observations of the progress of reconstruction and maintenance during the past eight years, not a few problems have arisen as to the effect of location on the future economical working of railways of this class. The questions usually left to the decision of the maintenance engineer are innumerable. Certainly a great many of the difficulties presented were, in the first place, unavoidable, but, unfortunately, not a few were due to bad location. This, however, was not always the fault of the engineer in charge of location, for frequently it would seem that too little time was afforded for this important part of the work, and during the hurry and excitement with which the work of construction was pushed forward, in the eagerness of the promoters to have the line opened for traffic, many of the more important problems of reconstruction were overlooked. It is evident, however, that no amount of time saved in the original work of locating a railway can compensate

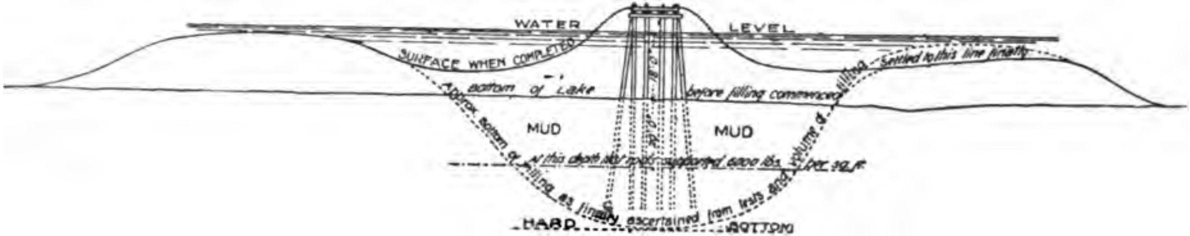
WATER LEVEL
SURFACE WHEN COMPLETED
Settled to this line finally
Bottom of Lake before filling commenced
MUD
MUD
At this depth mud supported 6000 lbs. per sq. ft.
Approx. bottom of filling as finally ascertained from tests and volume of filling
HARD BOTTOM

Fig. 1a.

for errors that may have a deteriorating effect on its future reconstruction and maintenance.

The Canadian Pacific Railway, stretching as it does from the Atlantic to the Pacific, traverses a territory of a nature so diversified that in its construction nearly every imaginable obstacle was encountered, thus affording a wide field for the ingenuity and skill of its engineers. Notwithstanding the rapidity with which the work of construction was carried on, it is remarkable how few errors were made in dealing with the various obstacles encountered and in providing for the future development of this great project. The experience attained by its engineers has been prolific of much useful data for the benefit of the profession, and has no doubt established certain rules to be adhered to in the work of location, peculiar to existing climatic conditions, and applicable to the variable nature of the ground traversed.

For example, in flat country or "table land," it is important that the formation level or subgrade, as it is called, should be kept as high as possible above the average level of the adjoining land, to provide for drainage, and guard against inundations which invariably occur in spring, from the melting of snow on the surface of the hard frozen ground. As the land taken for right of way is usually of a uniform width of 99 feet or 6 rods, sufficient material for a single track railway is procured from the side ditches, but failing this the additional filling required is taken from "borrow pits" at convenient points along the line. This class of work is usually termed "cut and cover," a cross section of which is shown Fig. 1 *b*.

In locating over undulating grounds, the material being of a clayey or sliding nature, deep cuttings are avoided as much as possible. Not unfrequently has the removal of a small quantity of material of this peculiar nature caused the general movement of a large area of the adjoining lands. To prevent the cuttings closing in, piling at the foot of slopes had to be resorted to in many cases. In situations of this nature provision is made for

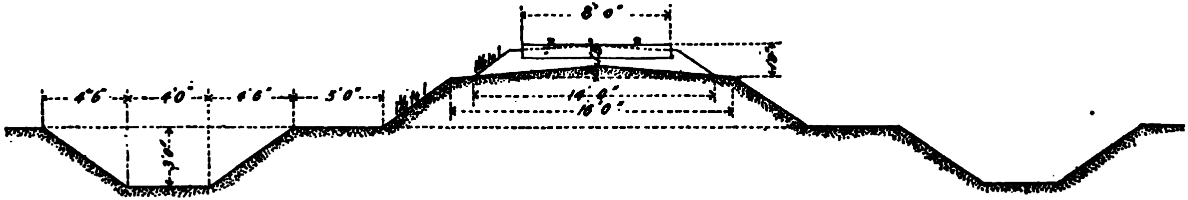

Fig. 1*b*.

draining the roadbed to prevent the track "heaving" while the frost is leaving the ground in spring.

The necessity for a properly drained roadbed in this climate is becoming more apparent now than ever to those interested in the maintenance of permanent way. Many of the recent failures in rails, that have only been in use a short time, can be traced to an uneven, badly drained, and poorly ballasted roadbed.

The location through the mountains was, on account of grade and general contour of the country, confined to a small area, which left little or no means of avoiding places exposed to land slides, snow slides, and wash-outs in spring. The snow sheds, which are an interesting feature of the construcrion through the mountains, have proved of great benefit in protecting the line from avalanches. Cribwork and masonry retaining walls were also constructed at the foot of slopes as a protection against land slides and erosion by floods.

TEMPORARY STRUCTURES.

In preparing the drawings of these structures attention was given to detail as much as possible in order to avoid a lengthy description, and make the work serviceable for reference. The figures illustrate the various structures composed of timber, whether regarded as temporary structures or otherwise. Of course, on a great many American railways timber structures are in many cases considered permanent work, and are renewed from time to time in timber. Indeed, if the durability of such timber as cedar be considered in the construction of box culverts, solid timber open culverts and cattle guards, in favourable situations, it would seem almost unnecessary to employ a more expensive class of structure. In many cases, where cedar had been used on some of the older railways, it was found perfectly sound after thirty years' service. In the case of fence posts and telegraph poles it is invaluable as an exceedingly durable timber, and can be procured at a comparatively small cost. Cedar sleepers or track ties are also used where they are easily procured; but on account of their lightness, and small amount of adhesion to spiking, they have not proved as efficient as those made from tamarac. Cedar is also largely used for piling and substructural work, both above and below water, and no doubt figures prominently in the small cost of maintaining the various structures in question.

CATTLE GUARDS.

Surface cattle guards of various kinds have been introduced indiscriminately, on account of their simplicity and comparative small cost, but so far as the writer is aware they have not proved as efficient as the open timber cattle guard, Figs. 1, 2, and 3, This structure, in some cases, serves also as an open culvert, where the water from the side ditches is intercepted and carried along the public highway. The span is invariably 6 feet and the minimum depth 3 feet. The drawings show the manner in which the structure can be adapted to either cutting or embankment. The sills and side walls are usually made from full squared cedar or tamarac. Cedar sawn on three faces is sometimes used for side walls, with the rough face towards the embankment, and placed on "flatted" cedar sills similar to those shown for box culverts, Figs. 4 and 5. The stringers, ties, and tie cleats are usually of pine.

BOX CULVERTS.

The cedar box culverts, Figs. 4 and 5, are constructed of 12-inch by 12-inch cedar drift-bolted together, and braced at intervals of about 5 feet with 8-inch by 8-inch cleats bolted to the outside of the side walls. The sills are of "platted" cedar, 8 inches thick, spaced 5 feet apart, and paved between with rough stone, hand laid. The covers are of 12-inch by 12-inch cedar, checked 1-inch over the side walls, and drift-bolted to the same.

The double 4 feet by 4 feet box culvert, Figs. 6 and 7, is usually constructed where a large waterway is required through an embankment. The number of chambers can be increased to four or six if required. This class of structure is well adapted to situations where the bottom is very soft, as for instance the bay of a shallow lake, or the channel of a slough, where the water level is subject to sudden fluctuations.

SOLID TIMBER OPEN CULVERTS.

The construction of these culverts, Figs. 8 and 9, is somewhat similar to those already described—that is solid timber side walls drift-bolted together, and braced with 8-inch by 8-inch cleats on the outside. These structures seldom exceed 5 feet in height, and serve also as cattle passes. Where greater height is required a framed culvert, Figs. 10 and 11 is, as a rule, adopted. A planked floor and sheet piling are sometimes necessary.

FRAMED CULVERT.

Figs. 10 and 11 represent what is termed a framed culvert. The framework is constructed of 12-inch by 12-inch squared timber, tenoned at sills and caps, and drift-bolted. The sheathing and flooring consists of 3-inch planking. This structure is adapted to situations where the water-course has a well-defined deep channel with gravelly bottom.

PILE CULVERT.

Where the situation is unfavourable for the class of structure shown in Figs. 8 and 9, a pile culvert of the class, Figs. 12 and 13, is substituted. The piles are driven to a solid bearing, and capped as shown, and sheathed behind with 3-inch planks.

The superstructure shown in Fig. 14, is common to each class of open timber culvert.

PILE TRESTLE BRIDGES.

The pile trestle bridge, Figs. 20, 21, and 22, already referred to on account of its adaptability to difficult or uncertain situations, consists of a series of 4 pile bents with their centres placed 15 feet apart. The inner piles are driven to a batter of 1 in 12, and where the height above ground will permit, the outer piles are driven to the same batter, and "sprung" to 1 in 6 at the top. The transverse bracing and longitudinal walings are of 3-inch by 10-inch timber, bolted to caps and sills and spiked to piles. The superstructure is similar to Fig. 18 prescribed for framed trestles.

FRAMED TRESTLES.

The design for framed trestles, Figs. 15, 16, and 17, was selected after a careful study of the various designs from which structures were built from time to time over the entire system. One feature of this design, which is no doubt a commendable one, is the absence of the usual elaborate system of longitudinal bracing, and the additional stiffness obtained from the arrangement of the horizontal longitudinal girts. There is nothing remarkable about the transverse bracing or arrangement of posts, except, perhaps, that the same system can be applied to any desired height by simply inserting an additional post between the two inner pairs, those with batters 1 in 5 and 1 in 24, when the space between becomes too great, as would occur had Fig. 17 been carried down another storey. Fig. 19 shows the minimum height for framed bents.

The floor system, Fig. 18, deserves mention on account of the fact, that by arranging the stringers in this manner, the load is distributed over a larger area at the point of application. It was found necessary to provide for the load due to increased weight of engines in this way without materially increasing the weight of trestle floor. It will be observed that the outside or jack stringers usually placed directly under the ends of ties, can be omitted by this arrangement and brought into action to better advantage nearer the point of application of the load. The stringers, ties, and guard rail are usually made from clear white or red pine, or Douglas fir. The remainder of the work from "merchantable" timber of various kinds.

CRIB PIERS AND ABUTMENTS.

Fig. 23 illustrates the manner in which crib piers and abutments for Howe truss, pony truss, and wooden lattice spans are constructed. The courses are dovetailed at all intersections, and drift-bolted together with drift bolts long enough to penetrate 2½ courses of timber. Oak trenails are used at all other points except where the timbers intersect. All intersections at cutwaters are dovetailed at the proper angle, and drift-bolted in the same manner. The nosing of cutwaters is protected as a rule with a covering of sheet iron. The timber used is cedar, pine or tamarac.

CRIB RETAINING WALLS.

Crib retaining walls are frequently introduced as a protection at the foot of slopes running out into water where there is danger of erosion from currents, also at various points where otherwise masonry retaining walls would be necessary. They are constructed from rough logs, laid in the manner indicated by Fig. 24, The timbers are notched at all intersections and drift bolted together. The timber used is chiefly cedar, spruce, and tamarac.

APPROXIMATE COST OF STRUCTURES.

The cost of the various structures referred to varies so much over so vast a territory that it is scarcely possible to give more than approximate figures. The following prices, however, may be considered a fair average, when timber can be procured at a reasonable figure, and the work done by experienced workmen, under the superintendence of men familiar with this class of work.

CATTLE GUARDS AND OPEN CULVERTS.

Timber in place per 1000 ft. B.M.	$20
Superstructure, stringers, ties, etc., ...	$30
Piling per lin. ft. left in work, ...	30 cents.

Wrought and cast iron included in above prices.

BOX CULVERTS.

Box culverts,	2 ft. by 2 ft. per lin. ft.	$2.5
Do.	3 ft. by 3 ft. ,, ,, ...	$3.0
Do.	4 ft. by 4 ft. ,, ,, ...	$4.0

FRAMED TRESTLE WORK

Framed trestle work in place per 1000 ft. B.M.,	$22
Stringers, ties, guard rails ,, ,, ,,	$30
Piling per lin. ft. left in work, ...	30 cents.

Ironwork included in price of framing above. Trestle work about 20 feet in height costs about $6 25 cents. or say 25 shillings per lineal foot.

Crib piers and abutments cost per cub. yard, including stone filling complete $3 50 cents. Open cribwork for retaining walls with stone filling costs per cubic yard $2.

The author had in view the idea of introducing in the present paper a few examples of the permanent work by which the temporary work is being rapidly replaced. There are many features of the construction of masonry arch culverts, piers and abutments, on Canadian railways which might be of interest by way of comparison, but in order to attain this purpose it will be necessary to deal with this division of the work apart from the present paper.

The principal object the writer had in view in preparing this paper, was to deal with the subject in a manner to be of interest to the younger members of the profession who, perchance, may have to engage in similar work. Exchange of ideas, not necessarily new, in the arrangement and performance of works of this description may frequently be productive of much benefit. Though much remains to be accomplished by the engineer in converting the desert and the tropical swamp into a habitation for civilised races, yet public attention has also been directed to the vast wealth lying for ages underneath the perpetual snows of our northern latitudes. To this region in future, no doubt, will the attention of the engineer be directed in solving the problems by which these regions may be made habitable and brought within the easy reach of man.

In conclusion, the writer desires to express his indebtedness to Mr P. A. Paterson, chief engineer, and other members of the engineering staff, for opportunities by which he was enabled to collect material for this paper, also his appreciation of the interest evinced on all occasions by these gentlemen in matters that tend to promote a more universal desire for interchange of ideas and closer fellowship between kindred societies, as well as between individual members of the same society.

Discussion.

The discussion on this paper took place on 23rd April, 1901.

Mr C. P. HOGG (Member) said the subject matter of Mr MacGregor's paper was not one which came to any great extent within the practice of engineers in this country. Nevertheless, there were several interesting points which were worthy of careful study, more especially to the younger members who might have to go abroad. On page 162 Mr MacGregor emphasised the importance of careful location, and that, of course, was common to all countries, but he would like to know the best method which had been adopted for such a great length of line where a comparatively free hand was allowed. He also noticed that on page 164 Mr MacGregor laid particular stress on the importance of keeping up the formation level. That was of very great importance in connection with drainage. The feature of the paper was the timber work in the trestle bridges. Figures 20, 21, and 22 illustrated very good examples of carpentry work, and somewhat common to the kind of work done in this country, but he noticed, particularly in Fig. 22, a point which he did not think he had ever seen in this country. Where the piles were of a sufficient height, the outer piles were driven to a batter of 1 in 12 in the ground, and then "sprung" above the ground to a batter of 1 in 6. He thought that that was a very good method for keeping the work well braced together. Good examples of carpentry work were also shown in Figs. 15, 16, and 17. At first sight, the diagonal bracing in Fig. 16 seemed to be defective, though it might not be so in practice. The longitudinal timbers might be sufficient, but, looking at it just as one sees it in the diagram, he thought it was somewhat deficient in diagonal bracing, although Mr MacGregor

Mr C. P. Hogg.

claimed it to be a feature in the design. "One feature of this design," he said, "which is, no doubt, a commendable one, is the absence of the usual elaborate system of longitudinal bracing and the additional stiffness obtained from the arrangement of the horizontal longitudinal girts." In regard to the prices which Mr MacGregor quoted for the timber work, he referred to a standard of 1000 feet B.M. He took it that that was the American Board measure, the standard thickness of which, he understood, was 1 inch, so that that would give about 83 cubic feet for 20 dollars, or rather under 1s per cubic foot, which was a very moderate price, and not half, probably, what one would require to pay in this country. Mr MacGregor referred to the price of trestle work 20 feet high as being 25s per lineal foot. He supposed that that meant per lineal foot of single line railway, but he would like to ask Mr MacGregor if that was so.

The PRESIDENT said he understood Mr MacGregor was in Canada, and that Mr Hogg would get an answer to his query by correspondence. He had much pleasure in moving a hearty vote of thanks to Mr MacGregor for his very interesting paper. He thought they ought to apologise to him for the fact that the discussion had been postponed as it had been. They were all aware, however, that in the particularly sad circumstances of this winter their discussions had been to a great extent upset, and perhaps more upset than they would otherwise have been on account of the very exceptional interest in one paper, the discussion on which was now under way. He did not need to say anything further on the subject, except to move a very hearty vote of thanks to Mr MacGregor for his excellent paper.

The motion was carried by acclamation.

Correspondence.

Mr MACGREGOR, in reply to Mr Hogg, stated that he was somewhat surprised to learn that a similar class of work to Figs. 20, 21, and 22, was being done at home. With regard to the efficiency—or rather apparent deficiency—of this diagonal bracing

Mr MacGregor.

in Fig. 16 referred to, he was inclined to think that the question raised by Mr Hogg was rather an important one. In theory it would seem erroneous to state that stiffness would result from any arrangement of members in a structure which did not assume a purely triangular form. The arrangement of the longitudinals in this case, however, had many advantages over many other designs, and particularly where the bents were connected by 4″ x 12″ "running boards" placed flatwise. When placed on edge, overlapped, and well drift-bolted, the resistance to longitudinal motion had been found in practice to be very considerable. In some cases the diagonals were omitted altogether where there were no embankments, and the ends of the trestle butted against the natural slope. The risk, however, of building long trestles without diagonal bracing was found to be too great, on account of their liability to collapse during erection by wind storms, as, indeed, happened in one particular case. The foot board measure referred to was the American standard, 1 inch thick, or 83⅓ cubic feet to the 1000 F.B.M. The trestlework figured at 25s per lineal foot was for single track. In conclusion, he would say that the same sad circumstances referred to by the President were more or less of a universal nature, and that, although he appreciated in no small degree the good intentions indicated, he sincerely felt that, under the circumstances, any apology for postponing the discussion on his paper was unnecessary. What he feared most was that the efforts of other members who had better claims might suffer from the same cause, and curtail the proceedings of what to his mind would otherwise have been a brilliant session. It so happened that he had chosen his subject at a time when very little was being done by the railway engineering Members, and he felt somewhat afraid that, even under the most favourable circumstances, the subject might be uninteresting. From his own experience, he might say that the efforts of members engaged in engineering works abroad were pretty much handicapped for lack of opportunity, but, nevertheless, it was gratifying to observe that communications from this wide field of engineering were generally well received.

THE MARINE STEAM TURBINE AND ITS APPLICATION TO FAST VESSELS.

BY THE HON. C. A. PARSONS, M.A., F.R.S.

(SEE PLATES III., IV. AND V.)

Read 19th February, 1901.

IT seems desirable, before proceeding to discuss the application of the Steam Turbine to the propulsion of vessels, to give a short history of its development as far as relates to its position as a motor extensively used for the driving of dynamo electric machines, and, to a more limited extent, for working fans, centrifugal pumps, screw pumps, and other purposes.

In the year 1884, the advent of the dynamo electric machine, and the development of mechanical and electrical engineering, created an increased demand for a good high-speed engine. Engineers were then becoming more accustomed to high speeds of revolution, for the speed of dynamos was at that time from 1000 to 2000 revolutions per minute; of centrifugal pumps from 300 to 1500; and wood-working machinery from 3000 to 5000; and Sir Charles Wheatstone had made a tiny mirror revolve at a speed of 50,000 revolutions per minute for apparatus for measuring the velocity of light. The problem then presented itself of constructing a steam turbine, or ideal rotary engine, capable of working with good economy of steam at a moderate speed of revolution, and suitable for driving dynamos without the intervention of reduction gearing. To facilitate the problem the dynamo was also considered with a view of raising its speed of revolution to the level of the lowest permissible speed of the turbine engine. In other words, to secure a successful combination the turbine had to be run as slowly as possible, and the dynamo speed had to be raised as much as possible, and up to the same speed as the turbine, to permit direct coupling.

In the year 1884, a compound steam turbine engine of 10 H.P. and a modified high-speed dynamo were designed and built for a working speed of 18,000 revolutions per minute. This machine proved to be practically successful, and subsequently ran for some years doing useful work, and is now in the South Kensington Museum.

This turbine engine consisted of two groups of fifteen successive turbine wheels, or rows of blades, on one drum or shaft within a concentric case on the right and left of the steam inlet, the moving blades or vanes being in circumferential rows projecting outwardly from the shaft, and nearly touching the case, and the fixed or guide blades being similarly formed and projecting inwardly from the case and nearly touching the shaft. A series of turbine wheels on one shaft were thus constituted, each one complete in itself, like a parallel flow water turbine, but unlike a water turbine, the steam after performing its work in each turbine passed on to the next, preserving its longitudinal velocity without shock, gradually falling in pressure on passing through each row of blades and gradually expanding. Each successive row of blades was slightly larger in passage-way than the preceding, to allow for the increasing bulk of the elastic steam, and thus its velocity of flow was regulated so as to operate with the greatest degree of efficiency on each turbine of the series.

All end pressure from the steam was balanced by the two equal series on each side of the inlet, and the revolving shaft lay on its bearings revolving freely without any impressed force except a steady torque urging rotation, the aggregate of the multitude of minute forces of the steam on each blade. It constituted an ideal rotary engine, but it had limitations. The comparatively high speed of rotation that was necessary for so small a size of engine as this first example, made it difficult to prevent a certain spring or whipping of the shaft, so that considerable clearances were found necessary, and leakage and loss of efficiency resulted. It was, however, perceived that these defects would decrease as the size of the engine was increased, with a corresponding reduction of rotational velocity, and consequently efforts were made towards the construction of engines of larger size, which resulted, in 1888, in several turbo-alternators of 120 H.P. being supplied for the generation of current in electric lighting stations, and at this period the total H.P. of turbines at work reached in the aggregate about 4000, all of which were of the parallel flow type and non-condensing.

In 1892 the compound steam turbine was first adapted to work in conjunction with a condenser. The first condensing turbine was of 200 H.P., and, at a speed of 4800 revolutions per minute, drove an alternator of 150 kilowatts output. It was tested by Professor Ewing, and the general result of the trials was to demonstrate that the condensing steam turbine was an exceptionally economical heat engine. With a steam pressure of 100 lbs., the steam being moderately superheated, and a vacuum of 28 inches of mercury, a consumption of 27 lbs. per kilowatt hour, which is equivalent to about 16 lbs. of steam per indicated H.P., was obtained. This result marked an era in the development of the steam turbine and opened for it a wide field, including some of the chief applications of motive power from steam. At this period turbine alternators of the condensing type were placed in the Newcastle, Cambridge, and Scarborough Electric Supply Company's stations,

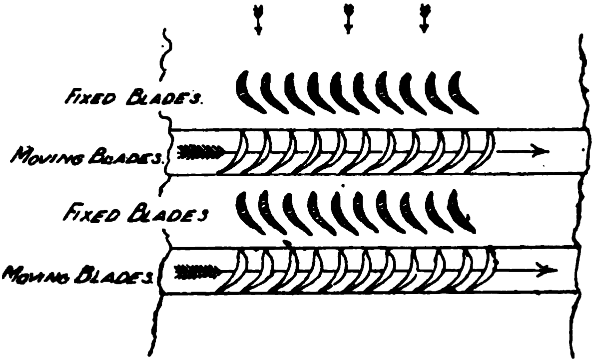

and soon afterwards several of 600 H.P. of the non-condensing parallel flow type were set to work in the Metropolitan Companies' stations, where the comparative absence of vibration was an important factor. Turbine alternators and turbine dynamos of 2000 to 4000 H.P. are now in course of construction in England, on the Continent, and in the United States, and larger sizes are being designed.

A turbo-alternator manufactured last year at Heaton Works, Newcastle-on-Tyne, for the Corporation of Eberfeld in Germany, was tested by a committee of experts from Germany, Professor Ewing being also present, with the following remarkable results. At the full load of 1200 kilowatts, and with a steam pressure of 130 lbs. at the engine, and 10° Cent. of superheat, the engine driving its own air-pumps, the consumption of steam was found to be at the rate of 18·8 lbs. per kilowatt hour. To compare this figure with those obtained with ordinary piston engines of the highest recorded efficiencies, and assuming the highest record with which I am acquainted of the ratio of electrical output to the power indicated in the steam engine, namely 85 per cent., the figure of 18·8 lbs. per kilowatt in the turbine plant is equivalent to a consumption of 11·9 lbs. per indicated H.P., a result surpassing the records of the best steam engines in the production of electricity from steam.

A turbo-alternator of 4000 H.P. is now being manufactured by Messrs Brown, Boveri & Co., of Baden, Switzerland, for Frankfort-on-Maine, which has been guaranteed to consume not less than 10·2 lbs. of steam per indicated H.P., the steam pressure being 200 lbs., and superheated to a temperature of 300° Cent.

Turbine engines are also used for generating electrical current for the transmission of power, the working of electrical tramways, electrical pumping and coaling, and similar purposes. They are also used for coupling direct to, and driving fans for, producing forced and induced draught for general ventilating purposes, also for driving centrifugal pumps for lifts of 200 feet, and screw pumps for low lifts.

The most important field, however, for the steam turbine is undoubtedly in the propulsion of ships. The large and increasing amount of H.P., and the greater size and speed of the modern engines, tend towards some form which shall be light, capable of perfect balancing and economical in steam. The marine engine of the piston type does not entirely fulfil all these requirements.

In January, 1894, a pioneer syndicate was formed to explore the application of the steam turbine to marine propulsion, those chiefly associated in the undertaking being the Earl of Rosse, Christopher Leyland, John Simpson, Campbell Swinton, Norman Cookson, the late George Clayton, H. C. Harvey, and Gerald Stoney. It was deemed expedient, for reasons of economy and also of time (as many alterations were anticipated) to build as small a vessel as possible, but not so small as to preclude the attainment of an unprecedented rate of speed. The "Turbinia" was constructed —her dimensions being 100 feet in length, 9 feet beam, 3 feet draught of hull, and 44 tons displacement. She was fitted with turbine engines of 2000 actual H.P., with an expansive ratio of 150-fold, also with a water-tube boiler of great power, of the express small tube type, but with no feed-heater. The turbine engines consisted of three separate turbines—the high pressure, the intermediate, and the low pressure—each driving one screw shaft independently; to the low pressure or centre shaft the reversing turbine was also coupled, and on each shaft were keyed three propellers of small diameter and of normal pitch ratio. This arrangement was found to be the best after many trials, and has since been adhered to in subsequent vessels. The maximum indicated H.P. that has been obtained on runs of about five miles duration has been 2300, giving a speed of 34½ knots, but a speed of 31 knots can be maintained for about two hours' duration, and as recently as last August, runs at this speed were made at Havre for the Committee of the Paris Exhibition, the vessel at the time being heavily laden and with a foul bottom, showing that after four years of work the turbine engines do not deteriorate in efficiency. Since she was completed she has run several thousand miles, sometimes in very heavy seas, and the main engines have never caused a moment's anxiety, nor have any repairs to them been required.

In 1896 the consumption of steam was investigated by Professor Ewing, F.R.S., of Cambridge, and Professor Dunkerly, now of Greenwich. The tests, which occupied more than a fortnight, were very elaborate, and comprised feed-water measurements, of great accuracy, at various speeds up to 31 knots. The water measurements were made by meters which were calibrated before and after each day's running. At the higher rates of speed, two meters were placed in series so as to check each other; the errors as determined by the calibration were less than 2½ per cent., and the results were taken as accurate within less than this amount.

The horse-power was determined by model experiments in one of the principal tanks in this country.

At the speed of 31 knots, the consumption of steam for all purposes was determined to be 14½ lbs. per I.H.P., the coefficient of propulsive horse-power to indicated horse-power being taken at 55 per cent. In other words, the consumption of coal for all purposes with a good marine boiler, under ordinary conditions and mild forced draught, would be less than 2 lbs. per indicated horse-power per hour.

The vessel's reversing turbine, which operated the centre screw shaft only, gave her an astern speed of 6½ knots, and when running at a speed of 30 knots, she could be brought to rest in 36 seconds. It was also found that she could be brought from rest up to a speed of 30 knots in 40 seconds.

The illustrations in connection with the problem of cavitation are from photographs taken by intermittent illumination of the propeller from an arc lamp, and by means of an ordinary lantern condenser and mirrors. The propeller was illuminated in a definite position of each revolution, and to the eye it appeared stationary. The cavities about the blades can be clearly seen and traced. In the last case the exposure was $\frac{1}{3000}$ of a second, the propeller running at 1500 revolutions per minute.

The results of the "Turbinia" having been found satisfactory, the original Company which built her was merged into a large Company, under the same directorate, for carrying on the work on a commercial scale. At Wallsend-on-Tyne the Parsons Marine Steam Turbine Company erected works, and in 1898 contracted with the Admiralty for a 31-knot torpedo-boat destroyer, the "Viper," which is of the same dimensions as the usual 30-knot vessels of this class, viz.:—210 feet in length, 21 feet beam, and about 370 tons displacement, but with machinery of much greater power than usual in vessels of this size. They also contracted with Sir W. G. Armstrong, Whitworth, & Co., for machinery for one of their torpedo-boat destroyers.

The turbine engines of those vessels are similar to those of the "Turbinia," but are in duplicate, and consist of two distinct sets of engines on each side of the vessel. There are four screw shafts in all, entirely independent of each other, the two on each side being driven by one high- and one low-pressure turbine respectively of about equal power. The two low-pressure turbines drive the two inner shafts, and to each a small reversing turbine is also permanently coupled and revolves idly with them when going ahead. The screw shafts are carried by brackets as usual, and two propellers are placed on each shaft, the foremost in each case having a slightly lesser pitch than the after one. The thrust from the screw shafts is entirely balanced by the steam acting on the turbines, so that there is extremely little friction.

The boilers, auxiliary machinery, and condensers are of the usual type in such vessels, but their size is somewhat increased to meet the much larger horse-power developed, and to compensate for the lesser weight of the main engines, shafting, propellers, as well as the lighter structure of the engine beds. The boilers are of the Yarrow type, with a total heating surface of 15,000 square feet, and grate surface of 272 square feet. The condensers have a total cooling surface of 8000 square feet. The hull and all fittings are of the usual design.

Let us consider the machinery on one side of the vessel only. The steam from the boilers is admitted directly through a regulating valve to the high-pressure turbine driving the outer shaft. It then passes to the adjacent low-pressure turbine, driving the inner shaft independently. Thence it flows to the condenser, and both the shafts then drive the vessel ahead. The reversing turbine revolves with the low-pressure shaft, and, being permanently connected with the vacuum of the condenser, no appreciable resistance is offered to its motion under these conditions. To go astern the ahead steam valve is closed and the astern valve opened, admitting the steam from the boilers to the reversing turbine and reversing the direction of rotation of the inner screw shaft.

On the other side of the vessel the arrangement is the same, and it will be seen that she can be manœuvred as an ordinary twin-screw vessel, and with great facility and quickness.

With full trial weights on board, and at a displacement of 370 tons, a mean speed of 36·581 knots on a one hour's full power trial was obtained, the fastest runs being at the rate of 37·113 knots, and the fastest pair of runs 36·869 mean, the mean revolutions per minute being 1180, and the mean air pressure 4½ inches. The speed of 37·113 knots, or nearly 43 statute miles, represents about 12,300 I.H.P. in a vessel of 370 tons displacement, as compared with 6000 to 6500 developed in the 30-knot destroyers of similar dimensions and 310 tons displacement.

At all speeds there was an almost complete absence of vibration. Her guaranteed speed astern of 15½ knots has been easily enough realised.

The "Viper" has passed all her official trials and has fulfilled all the guarantees of her contract. As regards speed she has exceeded the 31 knots guaranteed, by over 5 knots; and as regards the guarantee of 2·5 lbs. of coal per I.H.P. per hour at 31 knots, she easily obtained a consumption of 2·38 lbs.

No guarantees of coal consumption at reduced speed have been asked for in the case of any of the 30-knot, 32-knot, or 33-knot destroyers built for the British Admiralty, and no guarantee was asked for in this respect for the "Viper."

In the design of the "Viper" it was the aim of the Parsons Marine Steam Turbine Company to build a vessel of maximum speed under the usual Admiralty conditions and guarantees. In future vessels of this class provisions will be made to give an economy at cruising speeds of 12 to 15 knots superior to any existing at present in 30- or 31-knot destroyers with reciprocating engines, and the means of effecting this I shall presently explain, while at the same time it is anticipated that in the same vessels the present record of 36·58 knots mean speed will be surpassed, and that the consumption of coal at the highest speeds will be very much lower than that of the "Viper." It is not of course suggested that speeds above 35 knots should be constantly run on service but provided that ample fan power, and ample down-come area in the boilers, and ample margins of strength and power in the main and auxiliary machinery are allowed, such high speeds can be safely relied upon as being available in the emergencies of war, with the ordinary service staff.

By far the most serious element of uncertainty in the running of fast vessels with small tube express boilers arises, in my opinion, from salt water leakage into the condensers, which soon sets up priming and necessitates a reduction of speed to enable the water levels in the boilers to be clearly seen. If salt water leakage could be entirely prevented, then, in my opinion, it would be almost as easy and reliable to run for three or four hours at high speeds as at moderate speeds.

The "Cobra," built by Sir W. G. Armstrong, Whitworth & Co. at about the same time as the "Viper," has, after exhaustive trials, been purchased by the British Admiralty. She is a somewhat larger vessel with duplicate machinery to the "Viper," and is now the second fastest vessel afloat.

The British Admiralty now own the only two turbine-propelled ships which have been built under specification, and, as affecting the general introduction of the marine steam turbine for fast vessels, this circumstance may in some respects be regretted. On the other hand, the purchase of the second vessel after her trials may be some indication of the approval of the authorities of the new system of marine propulsion.

Before proceeding to discuss the application of turbine machinery to fast vessels in general, it may be well to state that, at the present time, turbines having a total of 140,000 H.P. are driving dynamos in England alone; that Messrs Brown, Boveri & Co., of Baden, Switzerland, have recently taken up the manufacture for land purposes on the Continent, and have on order several turbo-alternators of 4000 H.P. under stringent guarantees of unusually low steam consumption; that the cost of upkeep of machinery in stations with turbine machinery is generally below the average; that the Companies who have used them have been with few exceptions very prosperous; and, lastly, that the three vessels that have been fitted with turbines have all been eminently successful and have all achieved record speeds among vessels of their class.

Now as to the future. Though for obvious reasons up till the present time turbines have only been fitted in vessels designed for phenominal speeds, yet it must not on this account be assumed that they are only applicable to such vessels. The two conditions of suitability are that the vessel shall have a moderately fast speed and be of moderately large size. For slow vessels of moderate and small size the conditions for turbine machinery are not at the present time so advantageous.

This will appear clear when we consider that the turbine machinery is actuated by the momentum of the steam, and that the rows of blades must be sufficiently numerous and must move at a sufficiently high velocity to secure a good efficiency from the steam. The class of vessels that are most suitable for the application of turbine machinery are the following:—Pleasure steamers, passenger and cross-channel steamers, liners (including Atlantic liners of the largest size), also all fast war vessels, such as torpedo-boats, destroyers, cruisers of all sizes, protected cruisers, and all battleships of the usual speeds.

I shall now proceed to consider some of the applications of the steam turbine more in detail.

I will first take the vessel now building by Messrs W. Denny & Bros., of Dumbarton, for the service between Fairlie and Campbeltown, which it is hoped will be ready by the 1st of July.

Her dimensions are:—Length, 250 feet, by 30 feet beam, by 10 feet 6 inches moulded depth to main deck, and 17 feet 9 inches moulded depth to promenade deck.

Her general arrangements are somewhat similar to the "Duchess of Hamilton," and to those of the usual modern type of river or coasting pleasure steamer, but slight modifications have been introduced to suit turbine machinery.

The machinery consists of three separate turbines driving three screw shafts. The high-pressure turbine is placed on the centre shaft, and the two low-pressure turbines each drive one of the outer shafts. Inside the exhaust ends of each of the latter are placed the two astern turbines, which are in one with the low-pressure motors and operate by reversing the direction of rotation of the low-pressure motors and outside shafts.

In ordinary ahead going, the steam from the boilers is admitted to the high pressure turbine, and after expanding about 5-fold, it passes to the low pressure turbines, and is again expanded in them about another 25-fold, and then passes to the condensers the total expansion ratio being about 125-fold, as compared with from 8- to 16-fold usual in triple-expansion reciprocating engines. At 20 knots the speed of revolutions of the centre shaft will be 700, and of the two outer shafts 1000 per minute.

When coming alongside a jetty, or manœuvring in or out of harbour, the outer shafts only are used, and the steam is admitted by suitable valves directly into the low pressure motors, or into the reversing motors for going ahead or astern, on each side of the vessel. The high pressure turbine, under these circumstances, revolves idly, its steam admission valve being closed, and its connection with the low pressure turbines being also closed by non-return valves. By this arrangement great manœuvring power is obtained, and though similar to that adopted in the "Viper" and "Cobra," it has some distinctive advantages, especially as regards the reversal of the outer instead of the inner shafts, yet, it should be stated that the officers in charge of the "Viper" have described her as an extremely handy vessel of her class.

The main air-pumps are compound and worked by worm gearing from the main engines in the usual way. There are also small auxiliary air-pumps worked from the circulating-engines for draining the condensers before starting. The other auxiliary machinery is as usual in vessels with reciprocating engines, and includes a feed-heater fed from the exhaust steam of the auxiliaries, and also when necessary by steam drawn from an intermediate point in the expansion of the main turbines.

The boiler is of the usual double-ended Scotch pattern.

The speed of the vessel is expected to surpass that of any similar boat at present on the Clyde.

In vessels of the mercantile marine of moderate fast speed, it is of more importance to obtain economy in coal consumption than to reduce the weight of the engines and condensers to their lowest limit as is usually done in torpedo-boat destroyers, where the boilers are extremely light and heavily pressed, and the highest possible speed is the first consideration.

For the mercantile marine, therefore, it becomes desirable to design the turbines for the greatest possible economy in steam, consequently the ratio of expansion extends over nearly the whole range between the boiler pressure and that in the condenser; the condensers are also made of ample size so as to maintain a good vacuum, and an efficient feed-heating arrangement is provided to warm and heat the feed.

These economical measures are being introduced in the vessel now building by Messrs William Denny & Brothers, as well as in a new destroyer building by the Turbinia Company.

The arrangement of turbine machinery for a Channel steamer of 25 knots speed, and about 12,000 I.H.P. is similar to the vessel we last described, except that in this case, the revolutions are only 540 on the centre and 750 for the outer shafts.

Enough has perhaps been said to show that the marine steam turbine will be found to be superior or at least equal in economy of coal to the reciprocating engine when placed in fast vessels of the mercantile marine; but it may be asked, what will be the economy of the turbines when, as in the case of yachts and almost all war vessels, much steaming is done at from one-eighth to one-tenth power, the full power being only occasionally used? The answer is a simple one. At cruising speeds, the revolutions of the turbines fall well within the limits of speed of small reciprocating engines, and such small engines are then directly coupled to the main turbines, and work in conjunction with them, these small triple-expansion reciprocating engines taking the steam directly from the boilers and expanding it down to about atmospheric pressure, it then passes to the high pressure turbine, and thence through the low pressure turbines to the condensers. When somewhat higher speeds and powers are desired than this arrangement provides, a little boiler steam is admitted to the turbines, and when still higher speeds are required, and the speed of revolution rises beyond that permissable for the reciprocating engines, the stop-valve is closed, the coupling opened, and the turbines alone drive the vessel.

This combination of machinery permits the full range of expansion of the steam at cruising speeds, and the economy in steam and coal will be superior to that of the best ordinary reciprocating engines at reduced or cruising speeds.

In cruisers, the horse power required at cruising speed is between one-fifth and one-eighth of full power; in destroyers between one-eighth and one-twentieth of full power; in yachts it may be any ratio desired by the owner.

It should, however, be added that the turbines alone have their full measure of economy from half to full power, and even at one-quarter full power the economy is good. It is only when the cruising speed falls to nearly one-half the full speed, and the horse power one-eighth of full power, that the economy of the turbines requires some assistance, and such additions are only necessary in vessels such as war vessels and some yachts where much running is done at these very low speeds. They are quite unnecessary in passenger vessels and liners.

The arrangement of turbine machinery for an Atlantic liner of 20,000 to 30,000 I.H.P. presents no features of novelty over the preceding designs, but its simplicity of construction as compared with the present usual reciprocating engine, is more apparent than in the case of smaller vessels.

In turbines, to develop the large horse power required, the internal parts become, comparatively speaking, simpler, and are relatively less costly, and additional refinements of construction can be introduced, which are conducive to higher economies in coal.

For a 22-knot liner of 23,000 I.H.P. the speeds of revolution sink to about 300 and 420 on the inner and outer shafts respectively, and the consumption of coal will be less than is at present required for the same displacement and speed.

In the case of all the vessels named the reduction of vibration will be very considerable.

In conclusion, the principal advantages of the turbine system of propulsion for fast pleasure steamers and passenger steamers of all classes compared with vessels fitted with ordinary engines, may be briefly summarised as follows:—

(1.) Increased speed for the same boiler power, due to considerably reduced weight of machinery, and increased economy in steam. (This advantage increasing with higher powers and speeds.)

(1*a*.) Same speed, with reduced boiler power and reduced coal consumption for the same reason as par. 1.

(2.) Absence of vibration, giving greater comfort to passengers.

(3.) Increased cabin accommodation due to smaller machinery space.

(4.) Less upkeep in machinery, and smaller engine-room staff.

These are a few of the advantages which would enable a turbine boat to be a good dividend earner.

Discussion.

The Chairman, Prof. A. Barr, D.Sc., felt certain that every one present would remember that evening in days to come when turbine steamers would be much more familiar to them than they were at present. He would ask anyone who had any remarks to make upon the paper to do so now.

Mr Archibald Denny (Member) said he had hoped that some one else would have opened the discussion. He thanked Mr Parsons for delivering his interesting lecture. This was not the first time that he had heard Mr Parsons lecture on this subject; he heard him read a paper to the Institution of Naval Architects about three years ago, and naturally he was impressed with the advantages of the turbine. Curiously enough his firm had used one for driving the dynamo on board the P.S. "Duchess of Hamilton," built some years ago, and it worked exceedingly well. When he heard Mr Parsons read his paper before the Institution of Naval Architects he was fired with the ambition to work with him for the success of the turbine. Several months ago his firm got in touch with Mr Parsons, and they made up their minds that if possible they would jointly get a turbine vessel built for the mercantile marine. They naturally approached the railway companies in the first instance, but they affected a terrible amount of modesty, and each company was anxious that somebody else should make the first experiment. So the matter was hung up, and he was beginning to despair of success when Mr John Williamson came forward and lent them his aid. Mr Parsons, Mr Williamson, and his firm, having laid their heads together, resolved to build a mercantile turbine vessel, and he felt it was very gratifying indeed that the Clyde had been favoured in being the pioneer in this enterprise. It was gratifying to think that this was taking place during the era of the

Mr Archibald Denny.

great Exhibition, when many people would be able to see the advantages of this system. He did not know that he could discuss the merits of the new vessel, except to say that while nothing was guaranteed, yet a speed of something like 20 knots was anticipated. She was almost precisely similar to the "Duchess of Hamilton," but slightly deeper in draught, and with more displacement. The latter vessel steamed a little over 18 knots—he thought 18·1 knots—and if the new vessel reached 20 knots they were getting an increase of 2 knots, and he need not tell them that 2 knots at the upper end of the curve was a very big jump indeed. A speed of 36 or 37 knots was not aimed at, as they were not building a torpedo-boat destroyer, but a vessel in which they could take their wives and families and enjoy themselves for a day. He looked forward with the very greatest confidence to the further development of the system. While Messrs Yarrow and Schlick had done a great deal for the poor oppressed shipbuilder in balancing the reciprocating engine, Mr Parsons was going to do still more, and thus enable builders to construct ships of lighter scantlings with no fear of vibration. He believed the invention would be a great factor in the future of high speed steamers, and he had no doubt that Mr Parsons' genius would ultimately enable even the tramp owner to share in these great benefits.

Mr E. Hall-Brown (Member) felt that it was almost impossible to follow in detail Mr Parsons' very elaborate paper, and he trusted that although Mr Parsons had been so kind as to come twice to Glasgow he would come back again to join in a further discussion, although he hardly liked to suggest such a thing. He looked upon this paper as marking a new era in marine engineering. There were many points with regard to the steam turbine which marine engineers knew very little about, but other questions cropped up in connection with propellers which, although they had been brought into prominence by the development of the turbine engine, were of wide application. He therefore hoped that the discussion would not be closed that evening, in order that they might have an opportunity of studying and discussing the paper fully.

The CHAIRMAN stated that according to the bye-laws of the Institution a discussion was never closed on the night that a paper was read.

Mr JAMES HAMILTON (Member) wished to know whether any experiments had been made in reference to the relative efficiency of the nine propellers of the "Turbinia," or the twelve propellers in the case of the "Viper," or the five in the case of the new steamer that Messrs Denny were building, as compared with ordinary propellers. He thought it was recognised that about 50 per cent. of the H.P. was absorbed in wave making and skin friction, or to overcome what is called tow-rope resistance. It was a very interesting question how much of that might be saved by the very different disposition of the nine small propellers in the case of the "Turbinia," as against two moderate-sized ones in the case of the destroyers. He would also like to know whether it was proposed to differentiate between the propellers on the outside shafts of the new steamer that was about to be built, by making a different pitch in the aftermost ones from those immediately ahead, or whether the propeller shafts were to be inclined as in the case of the "Turbinia," so that the aftermost propellers would work in a lower stratum of water than the more forward propellers. They were deeply indebted to Mr Parsons for bringing this interesting paper before them, and he hoped they would have a good discussion on the subject.

Mr PARSONS observed that the motive power of the turbines had been very carefully determined by the driving of dynamos. The dynamo was a machine of very high efficiency which could be determined to within 1 or 2 per cent., and by that means they knew that a given design of turbine would give a certain consumption of steam per horse-power. Again, the consumption of steam in the engines of the "Turbinia" had been very carefully tested by Professor Ewing, by water meters, and her resistance was known by model experiments, and by these

Mr Parsons.

means Professor Ewing had arrived at the consumption of 14½ lbs. per I.H.P. assuming the usual coefficient of 55 per cent. ratio of propulsive H.P to indicated H.P. It might be mentioned as a comparison that a similar turbine when driving a dynamo would consume about 16 lbs. per brake H.P. The two methods, therefore, were seen to agree pretty closely. The coefficient of 55 per cent. efficiency, it should be explained, included not only the propeller losses, but also the resistance of the rudder and all the other underwater parts of the vessel over and above that of the bare hull itself. The propellers that they had used in these vessels up till now, though of normal pitch ratio, had rather wider blades than usual, and it would be natural to suppose that such propellers had an efficiency of about 64 per cent. as compared with, say, 67 per cent. with the narrower bladed propeller usual in 30-knot destroyers. On the whole, he thought they could safely tell within small limits as to what the turbine propellers were doing respectively. The turbine was somewhat more economical than the best reciprocating engine, and the propeller a little less economical than the best and proportionately narrower bladed propeller usual in torpedo boats and torpedo-boat destroyers.

Mr Robert Morton (Member) said there was one point about the practical application of the turbine in such a steamer as was being built on the Clyde that he would like to refer to. In the case of the "Turbinia," Mr Parsons said the reversing turbine caused the vessel, during a 30-knot speed, to come to rest in 36 seconds. That appeared to mean that the vessel must have travelled in that time something like nine times her own length, or about 900 feet, while in such a steamer as they had been used to in river traffic—an 18-knot paddle steamer—he rather thought it was an ample margin to say that she could be brought to rest in 15 seconds, and she would have travelled in that time something like 250 feet, or a distance equal to about her own length. As the "Turbinia" had a displacement of only 44 tons, the momentum of the "Turbinia" would be only about one-seventh of the 18-knot steamer he took

Mr Robert Morton.

as an example, and it looked as if it would take some time to bring up the 20-knot steamer proposed. He thought some light on the subject was wanted; for, although 36 seconds seemed a short time, yet, in running to piers continually, such delays might have a strong effect in taking away from the increased speed. It would not be a matter of any importance in a channel steamer, but in river traffic it might have some effect.

Mr WALTER DIXON (Member) remarked that they were all delighted with the paper they had heard from Mr Parsons, opening up, as it did in a very large way, a new feature in engineering. The discussion which had already taken place had brought to light the two popular prejudices against the steam turbine. No doubt in the early days the steam turbine was regarded as a "steam-eater," and this had been fully borne out in the practical working in many of the Parsons turbines in this country. The progress of the steam turbine had been so rapid that it behoved one, before discussing this point, to have an acquaintance with the latest results. Figures which he had seen as to the results of the latest types showed what great improvements had been made in economies, and also held out the possibilities of the hopes the writer of the paper had as to the future of the steam turbine. The other point which had been brought out was the difficulty in reversing and going astern. Already the latest possibilities were in advance of the "Turbinia.' He thought, from what the lecturer had said, that they might cease also to regard this as a valid objection.

Mr A. A. CAMPBELL SWINTON (Visitor) said it had been his privilege to be a member of the original syndicate which built the "Turbinia"; but he would like to say at once that, although some of the members of that syndicate happened to be engineers, the whole of the technical success achieved was due entirely to Mr Parsons, to whom belonged all the engineering credit. He had had rather exceptional opportunities of watching the progress of Mr Parsons' invention, which, he might say, was the first successful steam turbine, and existed some years before the Laval turbine. At the

Mr A. A. Campbell Swinton.

time Mr Parsons made his first machine—the year 1883 or 1884, he thought—he happened to be then resident in Newcastle, in charge of the electrical department at Messrs Armstrong's works, and he had some of the very earliest Parsons turbines that were made, and put them for lighting purposes on board ships of war. Since then he had been in a position to watch the gradual development of the turbine under Mr Parsons' care, and he must say that few people who had not had an opportunity such as his own, could have any idea of the enormous amount of difficulty and opposition that Mr Parsons had to encounter. In the first place, at the time that Mr Parsons commenced developing his steam turbine, every engineer—at anyrate, 999 engineers out of 1000—thought that what he was proposing was incapable of realisation. Engineers, from the days of James Watt up to about the middle of the last century, had been continually trying to make rotary engines, and they had all failed. There was not a single successful rotary engine then existing, and he believed that nearly all engineers of experience had formed the fixed opinion that it was a fool's search to try and find one. Mr Parsons tackled the subject, and he met with a great deal of prejudice. It was not prejudice in a bad sense, but the fact was that the belief was engrained in engineers that what he was attempting was impossible, and it was always very difficult to make engineers believe that a thing was possible when they had been brought up in the idea that it was not. Then, again, there was another difficulty. With a new thing like the steam turbine, it was natural and necessary to begin with small sizes. He thought Mr Parsons had told them that steam turbines were not suited for very small powers. It was very difficult to get good steam economy with a small size turbine. There was one on the table of two or three horse-power, but he expected that it was not very economical, and he thought that for so small a power probably a reciprocating engine would be better. Now, while, on the one hand, it would have been madness to commence with an experimental turbine of great power, one of the peculiarities of steam turbines was that it was very much easier to make large ones than to make small ones. There was no difficulty in making a large turbine very economical, but it was out of the question to begin with large sizes. That was one of the reasons why, in the earlier stages, as one gentleman had expressed it, turbines were called "steam-eaters. It was because they were small, and, as soon as Mr Parsons was able to make them large, he began to make them economical. It was only within the last twenty years that practicable steam turbines had been in existence, and that was a very short space of time in the history of engineering. Reciprocating engines had been in course of development for more than a hundred years, and he thought there could be no doubt that there was a great deal of room for improvement in turbines. The steam turbine was now only in the condition of development that the reciprocating engine was when it was twenty years old, and, as they knew what had taken place since that time, they would see what a very large amount of room there probably was for improvement. There was only one other point he would like to mention, and that was that the members of the original syndicate who built the "Turbinia" had great confidence in anything that Mr Parsons promised. Everything that Mr Parsons told them he would do with regard to the "Turbinia" had been verified, and much more than verified. When the "Turbinia" was begun, they wished to exceed the speed of all existing torpedo boats. The maximum speed of other boats was then about 30 knots, but by the time the "Turbinia" was finished the maximum had gone up considerably. Mr Parsons not only exceeded what he had set out to exceed, but he also made up for all the progress that had been made by other makers in the interval, and so he managed to get an absolutely superior speed under these difficult circumstances. In other respects there had been all manner of difficulties to overcome. The reversing was by many thought to be one of these, but, as a matter of fact, there was no difficulty in it at all. The experience that they had up to the present time was that Mr Parsons, when he told them that he would manage a thing, always kept his word, and he thought this ought to be taken into account in regard to what Mr Parsons had told them that night with respect to the future of steam turbines.

Mr J. A. RUDD (Member) wished to know how the engines used for driving dynamos and other machines were governed—whether by modification in the volume of steam or modification of the pressure of steam, and what effect that had on the economy, and within what percentage of variation of speed at varying loads.

The CHAIRMAN observed that it was now necessary to adjourn the discussion. Mr Parsons had kindly promised that if possible he would attend the next meeting of the Institution, when the discussion would be closed; but in case Mr Parsons should not be able to return, they could not allow him to leave them that evening without according him a very hearty vote of thanks for bringing before them this interesting and, as many of them believed, epoch-making departure in marine engineering practice. Mr Parsons would pardon him a personal allusion. He might refer to the fact that Mr Parsons was the son of the late Lord Rosse, whose name was known everywhere in connection with the great telescope, in the construction of which he had shown so much ingenuity. He thought, therefore, that they might look upon Mr Parsons as a born inventor, and he had shown by his perseverance in the development of the steam turbine that he had at least one of the essential inborn qualifications of the great inventor. He thought that what Mr Swinton had said to them that evening must have impressed every one with its truth—that Mr Parsons had in a comparatively short time overcome enormous difficulties. The point that Mr Swinton brought out was that Mr Parsons had been compelled to begin, so to speak, at the wrong end of his subject. Most of them in trying to invent things were able to choose to begin at the easiest end of the scale, but Mr Parsons had had to overcome difficulties of an altogether exceptional kind, and had been compelled to do so under specially disadvantageous conditions with regard to the scale upon which he was operating. He did not know how many turbines had now been made, but, of course, they were all familiar with the fact that

The Chairman.

turbines were now largely used for the generation of electricity, and he was certain himself that they would see them adapted and largely adopted in the future for such purposes as those which Mr Parsons had brought before their notice that evening. He would conclude by conveying to Mr Parsons their hearty thanks for his paper, and for his kindness in coming amongst them.

The vote of thanks was carried by acclamation.

The discussion on this paper was resumed on 19th March, 1901.

Professor A. JAMIESON (Member) said he wished to ask Mr Parsons, in the first place—What were the different reasons for using highly superheated steam in reciprocating engines, and in steam engines of the turbine type? He believed (but Mr Parsons would correct him if he was wrong) that in reciprocating engines the chief reason was to minimise condensation in the cylinders, whereas in steam engines of the turbine type, it was chiefly to minimise friction between the flowing steam and the surfaces of the fixed and the rotating parts, as the steam passed along them and from the one to the other. Both these applications, no doubt, resulted in economy of steam and coal. The former, however, demanded great care in the use of high flash-point lubricants, whereas in the latter no such care was required. He also asked Mr Parsons (as a corollary to his former question) whether there had been found any scoring or cutting action due to the use of such very dry high-pressure steam? The third question which he now put to Mr Parsons was, if he used ordinary saturated steam, or even wet steam to begin with, in the high pressure sections of his turbines—What would be its condition just before entering the condenser (*a*) at full speed trials and (*b*) at low speeds? Fourthly—What were the conditions of the steam before entering the condenser when superheated to 50 degrees, 100 degrees, and 150 degrees Fah. above the natural temperature of saturated steam? Fifthly—What percentage loss of propelling effect might be entailed by inclining the screw shafts to such a large angle, as was shown by the models and lithographs now placed before them?

Prof. A. Jamieson.

Sixthly—What might be the net gain by thus immersing the screws so deeply that racing would seldom if ever take place? In 1865-66, while serving his apprenticeship with the well-known shipbuilders and engineers, Messrs Hall, Russell, & Co., of Aberdeen, he frequently saw the engines of a steamer where stepped wooden cog-wheel gearing was employed to raise the revolutions of the screw above the naturally slow speed of the engines! Had Mr Parsons tried such a gearing, but with a reverse object, namely, to bring the very high speed of his turbines down to the required slower speed of the screws in tramps and other comparatively slow speed cargo boats? He asked the question because Mr Parsons told them at the last meeting that he had experienced a difficulty in dealing with slow speed steamers, and he (Professor Jamieson) saw from technical papers that some such gearing had quite recently been tried in submerged torpedo boats. His last or seventh question was—Had Mr Parsons tried other methods of reversing the screws than that of a separate reversing turbine, and if so, with what results? He had much pleasure in adding his congratulations to those of previous speakers, upon the Institution having received such an interesting and instructive paper from Mr Parsons.

Mr **William Alexander** remarked that Mr Parsons had said that the turbine engines of the "Turbinia," after four years' work, did not show any deterioration in efficiency, and that as soon as she was completed she had run several thousand miles, sometimes in very heavy seas, and the main engines had never caused a moment's anxiety, nor had any repairs to them been required. It was very important to know what proportion of the four years the engines had actually been at work. The ship, having a speed of above 30 knots, would travel a considerable distance even in a fortnight, but in so short a period the efficiency would not have time to deteriorate. There was an ugly rumour going about in the highest quarters as to the efficiency of the turbines, due to the wear of the blades by the action of the steam, and that the renewal of the blades became necessary. It would be important to know how much the efficiency of the turbine fell off when it had been in constant use, say in an electric light or power station, for several years, and also the cost of keeping the turbines up to a paying efficiency. It would also be interesting to know how the pressures and temperatures varied from ring to ring of the blades, and what ratio the area of the steam passages through the blades at the high pressure end, bore to that for the passages at the low pressure end of the turbine.

Mr E. HALL-BROWN (Member) remarked that those who had followed more or less closely the development of the Parsons' turbine motor, would rejoice with him that the results of the recent test of a 1200 kilowatt turbine generator had placed that type of machine, and consequently the turbo-motor, upon the very pinnacle of economy as a steam engine. Whatever feelings of doubt might have existed from the time of the public report of Professor Ewing's test of 1892, they were effectively dispelled by that test of a turbo-motor, driving its own air-pumps, and giving the extremely low consumption of 18·8 lbs. per kilowatt hour, when using steam of 130 lbs. pressure and only 10° Cent. of superheat. That figure was equivalent, as Mr Parsons had pointed out, to a consumption of 11·9 lbs. of steam per I.H.P. per hour with a first class generator of the ordinary steam driven type. It was interesting to compare that result with the figures recorded in the proceedings of the Institution of Mechanical Engineers as the results of the accurate trials of various marine engines of the ordinary reciprocating type. There it would be found that the lowest recorded consumption—and a very excellent result it was—was that of the engines of the steamer "Iona," with 13·35 lbs. of saturated steam at 160 lbs. pressure. He thought the two figures were pretty well comparable—the consumption in the one case referred to steam of 130 lbs. pressure with 10 degrees superheat and in the other case to saturated steam of 160 lbs. pressure—and from that comparison it was evident that under suitable circumstances the steam turbine was a dangerous rival to the ordinary reciprocating engine. The question then arose — Were the circumstances

Mr E. Hall-Brown.

suitable for the use of the steam turbine for the propulsion of vessels? That Mr Parsons had fully answered, and had shown that for certain types of vessels the turbine engine was a thoroughly suitable and economical marine engine. The great difficulty seemed to have been to design a suitable propeller for the high speed of revolution necessitated by the turbo-motor. The ordinary designs of propellers were unsuitable for these high speeds of revolution. Mr Parsons not only recognised the difficulty, but had shown how it could be solved. The use of two or more propellers, in series, on one shaft if not novel was very interesting, and in his spare time recently he had been endeavouring to analyse mentally the conditions calling for that expedient, and the mutual interaction of these propellers upon each other and upon the vessel. He had always held that the average screw propeller as generally fitted was much larger in diameter than was necessary, and that no loss of efficiency would result from a considerable reduction of diameter. He was well aware that for ordinary cargo-boat work a large diameter of propeller had been considered necessary by some engineers. In fact, an ordinary specification for such a propeller frequently stipulated that it should be as much as the draught of water would allow. That was in the days of deep-draught cargo steamers. He was quite certain that many propellers were made extravagantly large, in the hope that their efficiency was thereby increased. That even in very bluff vessels a small propeller might be much more efficient than a large one was clearly shown by some barges which he had been called upon to put propelling machinery into. These vessels did not come quite up to expectation with respect to speed, owing to an unfortunate tendency they developed to waltz over the measured mile instead of steaming over it in the ordinary way. The result was an investigation conducted by Messrs William Denny & Bros., in their experimental tank, at the request of the builders of the vessels. That investigation included the size of the propellers, and showed that the small propellers actually fitted to the vessels were much more efficient than any of larger

Mr E. Hall-Brown.

diameter. As that investigation was a most interesting one, he trusted that Messrs William Denny & Bros. might see fit at some future time, with the concurrence of the builders of the vessels, to add the results of these experiments to the records of the Institution. However much one might be inclined to reduce the diameter of propellers, the fact must be recognised that a limit would be reached, and that limit seemed to be attained when cavitation began. The existence of cavitation had been recognised by several leading marine engineers, but they were indebted to Mr Parsons for actually photographing, for their benefit, the examples of cavitation shown in his paper. Although he had not gone fully into the matter, it seemed to him that cavitation would begin as soon as the speed of discharge from a propeller exceeded the natural speed of influx due to the head of water and air. For a propeller with infinitely thin blades, that would be when the normal pressure upon any unit of surface of the propeller exceeded the pressure due to the head of air and water upon that surface. That question had been investigated by Mr Barnaby on behalf of Messrs Thornycroft, and he had given a figure which might or might not be universally applicable. The figure given by Mr Barnaby referred to the thrust pressure—the fore and after pressure — not to the normal pressure upon the surface of the blade, and was, of course, less than the pressure due to the head upon that surface. The thickness of the blades of the propeller and various other matters would necessitate the determination of the pressure by experiment. The whole question of cavitation was modified by placing two or three propellers in series, in the manner adopted by Mr Parsons. He gathered from a hint in the paper that these propellers were of different pitch; the aftermost propeller had a greater pitch than the forward propeller. The action of these propellers involved a very beautiful and, he was afraid, a very complicated investigation, and he would like to know for a fact whether any tank experiments had been conducted with three propellers in series, such as he presumed the "Turbinia" had. He was sure that if such investigations had not yet been con-

Mr E. Hall-Brown.

ducted they would very likely be, and he thought it would add greatly to the value of the proceedings of the Institution if the results could be embodied therein. Following through the paper, he noticed that Mr Parsons adopted a figure for the combined efficiency of propulsion which was very like the figure upon which they had been working for ordinary propellers and machinery, namely, 55 per cent. There was no doubt that, from the results, that figure was not far off being right, but he wondered whether the hull efficiency might not be higher, and the propeller efficiency lower; and although 55 per cent. must be very near the mark, judging from the results obtained in tanks and elsewhere, he would very much like to know what the actual efficiency of these propellers "in series" was. It would be observed that if the propellers were designed to increase in pitch from forward, it would not be suitable for stopping or going astern. For a short distance steamer—one that had to stop frequently at piers—the paddle steamer was a very handy vessel, and he was afraid the turbine steamer was much less handy. Still Mr Parsons had stated that for certain services, such as torpedo-boat destroyers, the vessels were considered very handy, and at the worst it merely came to this, that at present turbine steamers were more suitable for long distances and uniform speed than for any other service. He had the misfortune once to see a Parsons' turbine into which a body of water had found its way, probably through priming of the boiler. As a result, nearly all the vanes had been stripped off the revolving cylinder. He would like to know whether this had happened frequently, or indeed if it was likely to happen again.

Mr A. S. YOUNGER, B.Sc. (Member) observed that there were many present that evening who were specially interested in slow speed cargo boats, and he was sure that all such would be greatly indebted to Mr Parsons if he could indicate what alteration would be necessary in the turbine, in order to adapt it to such steamers. According to a statement in his paper, he was unable in the meantime to promise that the turbine could be applied to steamers of a less speed than about 15 knots or thereabout, so that in the vast majority of steamers turbine machinery could not be used. There were a great number of points about the turbine which, he was sure, would commend it to cargo boat owners. It was extremely simple in construction, with comparatively few working parts; and Mr Parsons had told them it was economical, so that, if he could overcome the difficulty that at present existed, and show how it could be adapted to the slower speed boats, he was sure that a very great revolution would result in the usual means of steam propulsion. It was said that the thrust was entirely taken up by the pressure of the steam against the fixed vanes, and he could quite see how that was the case when steady motion had been attained; but in the case of a steamer passing from zero speed to 30 knots in about 40 seconds, very great accelerating forces must be required, and similar forces would, of course, arise when the way was being taken off the steamer, so that he would like to know whether, under these circumstances, some fore and aft thrust would not be produced, and also how such thrust, if produced, would be provided for. There was one other point in the paper that was more a matter of interest than importance, namely, the use of the term I.H.P. He presumed that the indicated horse power was arrived at by model experiments, which certainly gave accurate results so far, but the result could hardly be called indicated horse power, and the use of the term in that connection seemed to him to be a misnomer. The only method that he could see by which such a figure could be arrived at in the case of a turbine engine, would be by the use of some device for measuring the direct torque on the shaft, and that, multiplied into the revolutions, would give the true power. He must join with the previous speakers in congratulating the Institution on having a paper of this importance brought before them by Mr Parsons.

Mr J. MILLEN ADAM (Member) desired to add his word of appreciation of the paper that was read at the last meeting, and of the thought that lay behind it. He was greatly struck by the

Mr J. Millen Adam.

myriad vanes and their arrangement on the periphery of a rotating cylinder. The form of those vanes and the converse vanes of the propeller were of great interest, and what struck one was that the genius which could conceive the advantage of these minute sub-divisions as applied to steam, should be compelled to adopt unusually broad blades in dealing with the denser medium. That was undoubtedly compulsory, because of the form of the instrument at present at command. He had put a diagram on the blackboard behind the chair to illustrate the following remarks on the question of propellers, which had already been raised.

The CHAIRMAN, Mr A. Denny—It was the size and speed of revolution which were involved. He understood that his object was directed towards the question of cavitation. Had Mr Adam made experiments on that?

Mr ADAM—He had, but they had been confined to experiments on board a ship without having the scientific apparatus which was at the command of Mr Parsons, the chairman, and others. He was glad the former pursued his investigations under water, and was so good as to put before the Institution those most interesting photographs of what went on in the wake of a helical screw. They were not informed whether the screws had a gaining pitch. He presumed not; but whether or not, the application of several screws in series would be of no advantage if the first propeller were doing what it was supposed to do, unless under one limited condition, which—as he should presently show—the helical screw could not produce; but, under the conditions which the first propeller actually did produce, the utility of a following propeller was apparent. Figs. 1 and 2 were respectively side and end views of a portion of the path of a helical screw blade of ordinary form, the outlines of which were shown. The circular arcs, *b*, *c*, etc., were theoretical stream lines plotted also on the first figure, the radii represented 15 degrees of rotation. Now, as all motion was relative, they had to consider the water as rotating to the left against the vane. When stream *c* met resistance by touching the edge, it took—according to Newton's first law of motion—a tangential path, unless acted on by a restraining force. The screw blade provided no such reaction, but, on the contrary, it presented, as would be presently shown, a tangential path of

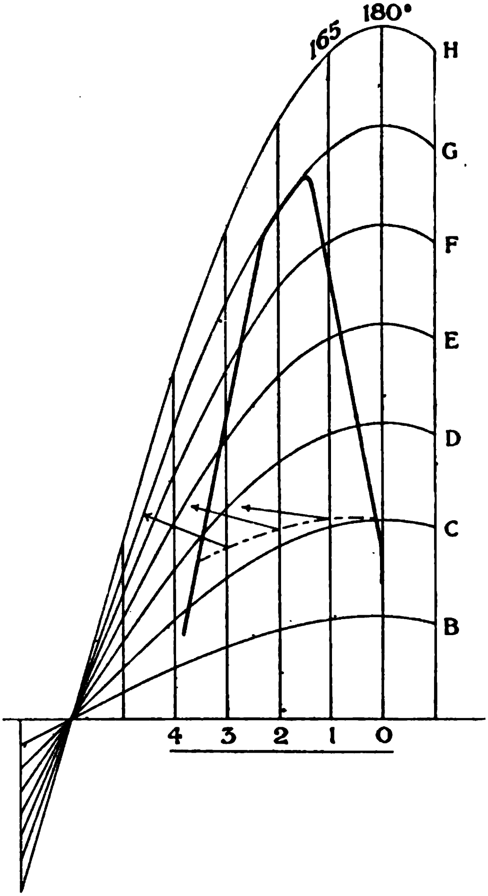

Fig. 1.

decreasing resistance. With stream *c* as dotted, the diagram of force representing reaction would not be a cylindrical column directed aft, but an expanding cone, demanding a following wake of dead-water, and therefore constantly rupturing to provide or

Mr J. Millen Adam.

admit that wake. A propeller following on the same shaft could not be said to work in the stream of the first, although within range of its turbulence. In Fig. 3 the spaces bounded by horizontal lines showed (on a larger scale than the other figures) the length of arcs of 15 degrees on stream *c*, and the dotted lines the augmented arcs of the tangent, the spaces bounded by vertical lines represented pitch length for the same arcs. The diagonal showed the pitch ratio at *c*, and the dotted diagonal or line of tangential escape was seen to be a convex curve of losing pitch, becoming pronounced as the blade was increased in breadth, or rather as the

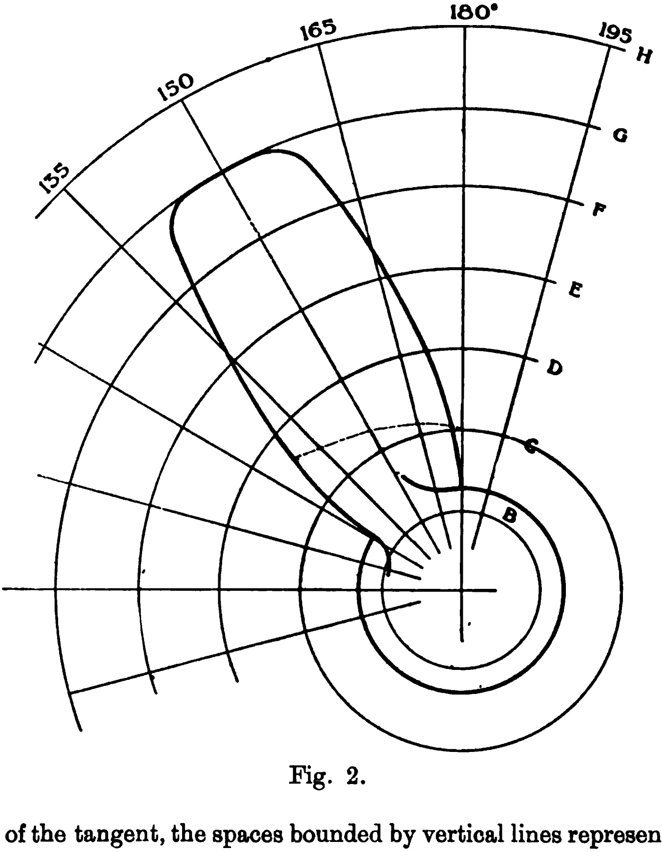

Fig. 2.

angle subtended by it increased, so that even in a narrow blade that feature was very marked near the root. The hydraulic pressure prevented the whole body of water between the blades from so escaping, but created strong eddies which were spurned in all radial directions (the upper ones appeared on the surface at a definite distance aft of the propeller according to pitch and immersion). The volume so dispersed increased with the speed until cavitation was inevitable, as shown by Mr Parsons on Plate IV. (1500 revolutions). Tip cavitation was different and appeared to be related to the phenomenon of *vena contracta*. Having approached the subject from studies in pneumatics, although not without experience in water, he feared that what had been stated might be commonplace knowledge to many members of the Institution, but the important question was whether the problem so stated could be solved. No one pretended to expect the propeller to pass through water without disturbing it, and the movement imparted must, at its best, partake of a rotary character; but owing to its form the helical screw attempted an impossible thing—to rotate a

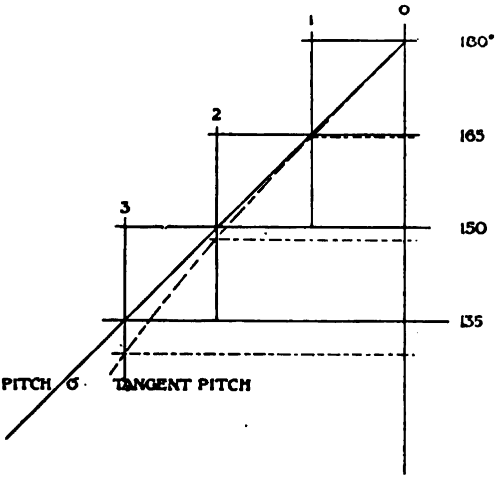

Fig. 3.

Mr J. Millen Adam.

column of fluid upon its axis like a solid bar. There was only one movement of fluid homogeneous and persistent—the cyclonic or vortex motion. These qualities were well illustrated by smoke rings which showed the observer that they never ruptured from within, and their persistence suggested that they did not expend much power. Now, again, remembering that all motion was relative, he conceived a vortex column of water with speed related only to the instrument that produced it, and which was slight at the periphery in relation to its surroundings, but in its internal structure obeying the cyclonic law. Were it possible to make the core of such a column rotate in the direction opposite to the propelling instrument, its action would be perfect, and propellers in series would have great efficiency. The converse motion would be only less efficient to begin, but would probably put a following propeller, or series, out of the question. A vane to produce improved results must have, among others, the following characteristics: a rapidly gaining pitch with leading edge at or under speed pitch, a pure geometrical basis in perfect control to modify the pressure regularly between the root and the tip, and a strong centripetal reaction transforming that pressure into speed toward the core. He might at a future time ask indulgence to put these views before the Institution in a more concrete form.

Mr Alexander Cleghorn (Member) wished to ask Mr Parsons a few questions regarding the last paragraph of his very interesting paper. In that paragraph were summarised the principal advantages of the turbine system of propulsion, for various classes of vessels, over that presently in use. The first advantage stated was "increased speed for the same boiler power, due to considerably reduced weight of machinery, and increased economy of steam." Mr Parsons had not, however, stated the weights of the propelling turbines which he proposed to supply to any of the various types of vessels cited, and as that information was of prime importance, he would ask Mr Parsons to supply it. He also wished that Mr Parsons had laid before them more detailed information regarding the measurement of the consumption of steam per I.H.P. for the trials of the "Viper." The second advantage cited was the "absence of vibration, giving greater comfort to passengers." He thought that this would prove to be the strong feature of the invention. Some thirteen years ago be had experience of a Parsons' steam turbine coupled direct to a dynamo, which was employed to light up a war vessel whose machinery was being fitted up under his care, and he was very much annoyed by the continual buzz and forced vibration of short period which it produced in the neighbourhood. He had no doubt that Mr Parsons had been able to remedy this defect, but would like information on this point. Thirdly, Mr Parsons claimed "increased cabin accomodation, due to smaller machinery space." He had examined the pamphlet issued some time ago by Mr Parsons' Company with reference to this, but did not find that much reduction in the length of the engine room had been effected. In the case of the Atlantic liner of 23,000 I.H.P., proposed by Mr Parsons, an engine room was required 50 feet long, which was the same length as that of the "Campania." In Mr Parsons' design the engine room hatch was continued parallel down athwartships to the level of the lower deck. Owing to the evidently greater floor space occupied by the turbine machinery, he did not think that this arrangement provided adequate space for all the auxiliary machinery which such a vessel must carry. The turbines were shown of about 14 feet diameter, and he would like to know if sufficient head room had been provided for their efficient overhaul. It did not appear evident that the upper casings of the turbines could be lifted off in the space provided. These remarks, however, brought him to the fourth advantage of "less upkeep in the machinery, and smaller engine room staff." It was unfortunate that no information, more than that the "Turbinia" having run several thousand miles at sea had required no repair, was given; and although that was a result on which Mr Parsons received their congratulations, it did not dispense with the necessity of a prudent examination of the working parts at regular intervals. He supposed, therefore, that sight doors would be provided for the examination of the

Mr Alexander Cleghorn.

vanes, and he would like to know if any difficulty had been experienced by these becoming loose, and also what were the results consequent on detachment. Could Mr Parsons indicate the probable cost of up-keep in comparison with that for engines of the present type engaged in similar service? In the prospect of having the pleasure of making turbines of large dimensions, under a royalty, he would like to know if any special plant would be required. The paper closed with the statement (which, from the point of view of the shipowners as well as many other persons, would appear to be the most important), that the foregoing "advantages would enable a turbine boat to be a good dividend earner." That most desirable result greatly depended on initial cost, and he would therefore like to know the cost of the various classes of turbine machinery which Mr Parsons had now laid before the Institution. He most heartily congratulated Mr Parsons on his magnificent achievements, and he put these questions to him in no hypercritical spirit.

Mr R. T. NAPIER (Member) expressed a desire to know if Mr Parsons had had any experience of vanes getting adrift, or of any derangement resulting from such an accident.

Correspondence.

Mr R. J. WALKER said Mr Cleghorn in his remarks had raised a few questions relating to the advantages set forth in the latter part of Mr Parsons' paper, on which, as a member on the staff of the Marine Turbine Company, he wished to make a few remarks. He might say that, owing to the courtesy of shipowners, shipbuilders, and engineers, who had furnished them with data of actual vessels built, they had been enabled to make some interesting comparisons. He should first take the question of reduced weight. That, of course, with the other advantages set forth, depended greatly upon the design of engine to meet the conditions required; but for pleasure steamers similar to those running on the Clyde, Thames, and elsewhere, of about 1400 to 4000 I.H.P., the weight of turbine machinery would be from two-fifths to three-

Mr R. J. Walker.

fifths of the weight of paddle engines complete, for the same power. With a twin-screw cross-Channel steamer having triple-expansion engines of about 10,000 I.H.P., a saving of over 100 tons could be obtained, which alone would mean an increase in speed of about from ¾ to 1 knot for the same I.H.P. In the case of a Channel steamer of about 6000 I.H.P., with twin screws and ordinary triple-expansion engines, designed for a minimum weight, a saving of at least from 30 to 40 tons would be obtained by fitting turbine engines; and in addition there would be a further increase of speed due to the greater steam economy of the turbine. On the other hand, if it was desirable to keep the same total weight of machinery and boilers, the saving in weight of turbines could be applied to the fitting of larger boilers, and consequently a still higher power and speed would be obtained. Absence of vibration he considered a very strong feature in the turbine, as proved by all the vessels fitted with turbine engines, as well as by the Admiralty report of the "Viper." Another favourable point was that of reduced space of engine room. In nearly all the comparisons which they had before them, they had been able to arrange the turbine machinery and its immediate auxiliaries, as well as all the ship's auxiliaries, in a somewhat shorter space than that required for ordinary engines, or, at the outside, in the same length, whilst in all cases they had obtained a greater deck area, which was very important in passenger vessels. In one or two cases the increase in deck area was a very noticeable feature. He had no doubt Mr Parsons would be pleased if Mr Cleghorn could furnish him with particulars of the vessels he had referred to, and he had no hesitation in saying that turbine machinery could be fitted in the same or less space than was required for ordinary engines of the same power. Some time ago an idea was prevalent in certain quarters, that the first cost of turbine machinery was so great as to prevent shipowners taking it up from a financial point of view, but, he was pleased to say, that that idea was erroneous. Mr Parsons stated in his paper that the two conditions of suitability for turbine engines were that the vessel should have a moderately fast speed, Mr R. J. Walker.

and be of moderately large size—that was to say, for speeds of 15 and 16 knots and upwards. For vessels fulfilling these conditions, the first cost of turbines (which, again, greatly depended on the conditions required) would compare very favourably with the cost of ordinary engines under similar conditions for the same I.H.P. (the I.H.P. being taken as equivalent to the power required with ordinary engines to drive the vessel at the same speed). For high powers and speeds, turbine machinery would probably cost less than reciprocating engines. He quite agreed with Mr Cleghorn that the question of dividend was a very important one, and he had no doubt that those directly interested in the construction of the new turbine steamer for the Clyde were fairly confident of the undertaking turning out a complete success, and proving the commercial value of the turbine system when applied to vessels of the mercantile marine. In conclusion, he might say that all the results obtained were estimated from detailed calculations.

Mr WILLIAM O'BRIEN (Member) — Mr Parsons had given some details of a Channel steamer of 25 knots speed and 12,000 indicated horse power. From the draught and other details, he (Mr O'Brien) inferred that the proposed steamer was for the Channel service between Dover and Calais. With the steamer going at the rate of 25 knots, and the enormous way on her at that speed, when the order was given to put the machinery full speed astern, it would, in his opinion, be quite impossible to bring up the steamer with the two reversing turbines as mentioned by Mr Parsons for that purpose, in the available distance between the pierhead and the shipping berth. The steamer must be brought to rest within a distance of about 700 yards from the pierhead, otherwise she would take the ground. He thought it would be impossible to run between Calais and Dover—a distance of about 20 nautical miles—in the time limit at the speed of 25 knots, not making any allowance for bad weather and adverse tides. The machinery would require to be entirely stopped, and most of the way taken off the ship, before the pierhead was reached, to enable the two reversing turbines to bring up the ship in time to prevent disaster, thus increasing the time and decreasing the speed over the passage between the pierheads to, he should say, nearer 20 than 25 knots. He (Mr O'Brien) might mention that he had had a good deal of experience on that particular Channel service. He had been in the employment of a firm that built and engined three paddle steamers, for that service, each of them over 6000 I H.P., and he took charge of the machinery when running the contract trials, which in each case was of a month's duration. Each of those ships fulfilled the terms of their contract, and had some time to the good on the average time allowed, one passage being accomplished within 60 minutes. To make the passage with these steamers in the time allowed as per contract, the machinery could not be slowed down, nor any way taken off the ships, until the pierheads were reached, when the order from the bridge to the engine-room was "stop," then "full speed astern," the ship being brought up in the limited space available. In his opinion, that feat could not be accomplished by any screw steamer, far less by Mr Parson's proposed steamer with his turbine engines. Running on this service was a totally different matter to steaming over the measured mile when the vessel might run any distance after passing the post.

The Hon. C. A. Parsons in reply said that the last occasion on which they had met, Mr Morton spoke of the probable distance traversed before a turbine steamer could be brought to rest, and based his calculations on the time required in the case of the "Turbinia" to bring her to rest. He, however, thought that Mr Morton's method of calculation was incorrect, and led to a too great distance, namely, 900 feet in the process of reversing from 30 knots to rest in 36 seconds. It appeared to him (Mr Parsons), by theory, that she could not go much more than 350 feet, because, when the steam was shut off, the resistance of the hull alone when she was at high speed was so much greater than when she was at slow speed, so that it was not right to take the mean. Then again, the torsional brake of the astern turbines was

Mr Parsons.

enormous when they were rotating against the steam admitted to them. As a matter of fact, the propulsive power of the "Turbinia" was one-ninth of her weight when at full speed, and when the steam was shut off that retarding force alone (if it were continuously and uniformly maintained, and allowing for the momentum of the stream lines of the vessel), would bring her to rest in about 550 feet. Assuming the stern turbines were put into operation as quickly as possible, he thought, from theory, that she would probably be brought to rest in under 300 feet, and although no accurate measurements had been taken, he believed that to be about the distance actually traversed. The only actual comparative observations of value bearing upon this question were the observations made on the "Viper" trials at Portsmouth, where that vessel was brought to rest in about the same time as the standard 30-knot destroyer. He believed that that time could have been very much shortened, had it been necessary to do so, but the usual Admiralty intervals were attained with ease, though the valves were operated leisurely, and only about one-half full steam admitted to the reversing motors. He would be glad if Mr Morton could favour them with any actual observations of the performances of river steamers, both paddle and screw, and how far they would travel before being brought to rest, as it would be interesting. He had never seen any data published. The effect of two screws set tandem on the shaft was apparently to increase the power of stopping, for when reversed the after screw threw the water on to the forward screw and increased the grip on the water. His impression was that a vessel equipped with screws like those shown on the model of the "Viper" would be probably stopped in distances somewhere between those possible with a paddle boat and an ordinary twin-screw boat. A gentleman at the last meeting had asked what governors were used on land turbines. He might say that either an ordinary governor or an electrical governor was used. The action of the governor was combined with a small reciprocating movement which cut off the steam, more or less, in pulsations. The chief advantage of this reciprocating movement was to neutralise friction and so prevent hunting. Professor Jamieson had very kindly sent him notice of his questions to which he would have much pleasure in replying. Many steam turbines had been in use with superheated steam for the past three or four years, and no deterioration of the blades or surfaces was observable. In some cases the superheat was as high as 150 degrees Fah. above the temperature of the boiler. Generally speaking a superheat of 50 degrees Fah. reduced the steam consumption by about 9 per cent., and a superheat of 100 degrees Fah. by about 12 per cent. On the Continent, Messrs Brown, Boveri & Company were making turbines which were to be used with a superheat of over 200 degrees Fah., or equivalent to a temperature of about 300 degrees Celsius. In his experience the blades did not deteriorate in any respect. From observation it appeared that the temperature of the steam fell to the point of saturation after a portion only of the expansion, the exhaust steam being of course saturated; for instance, speaking generally, with about 100 degrees Fah. of superheat, and at full load, superheat was maintained from about one-third or two-fifths of the way down the expansion, but at light loads, when the engine was doing little work, the steam was superheated throughout into the condenser. The diminution of consumption apparently arose partly from the annulling of the liquid and skin friction of the water, and partly by the greater volume and intrinsic *pro rata* energy of the steam. The effect of superheat was quite different in the reciprocating engines where the benefit arose from the annulling of condensation and evaporation, as well as from the greater volume and energy of the steam. As to the effect of inclination of the screw shaft to the direction of its motion through the water, no exact data was available, apart from information derived from observations of model propellers and the calculated behaviour of a propeller whose axis was set at a small angle to the direction of motion. Such a small inclination as was adopted in turbine vessels had probably no material effect on the efficiency of the propeller; while a small inclination was decidedly

Mr Parsons.

beneficial when two propellers were placed tandem on one shaft, as a large portion of the wake of the forward propeller then passed clear of the after propeller. The effect of depth of immersion was small as compared with the atmospheric column of 30 feet, and was of little moment in smooth water, but in a heavy sea the small diameter of propellers, and the greater depth of their immersion below the surface, were very important indeed. The propellers were not so liable to race, and the vessel was able to maintain her speed much better under such circumstances than an ordinary screw vessel. The "Turbinia" had been caught in some very heavy weather, and her propellers had never shown the slightest sign of racing, though there were no governors on her engines. In regard to gearing on board ship he was afraid he must differ from Professor Jamieson's conclusions. He had made a point of testing the best spiral gearing which could be made, with the view of gearing down steam turbines. But the results, generally speaking, had not been satisfactory, on account of the great noise and the heavy cost of up-keep. The gearing had been tested by driving a 200 H.P. dynamo running at 4800 revolutions per minute, by a turbine running at about 10,000 revolutions per minute, and it was kept running as much as possible so as to test it thoroughly. The efficiency of the gear was very high indeed, but the noise was insupportable, and the cost of up-keep abnormally heavy chiefly owing to fractured bearings. Everything about the gear went to pieces in time, and they came to the conclusion that gearing was practically out of the question for any but very small sizes, and in cases where it was possible, even with considerable loss of efficiency, to use direct coupling this plan was to be preferred. A great many methods of reversing had been carefully considered, but he did not think that when put into shape for marine work any of them approached or could be compared with the simplest of methods which they used—of a small reverse turbine to which steam was admitted when reversing was required, and, when not required, rotated without appreciable resistance, wear, or noise in the vacuum of the condenser. Mr Alexander asked what was the deterioration of the blades in the "Turbinia" and the amount of running done by her. He thought that question must be answered by saying that the "Turbinia," in the last four years had gone about 3000 or 4000 miles, but for long experience reference should be made to land turbines of similar construction, some of which started to work in 1887, and subsequent years. Two 25 H.P. turbines were erected at Messrs Davidson's mills, at Newcastle, in 1887, and had been running for about 16 hours a day up till last year, and when the blades were examined with a microscope they could not detect any deterioration or wear of the blades. That had been their experience all through. With clean steam or ordinary steam there was no wearing whatever.

Mr SAM MAVOR asked what was the steam pressure in the turbine?

Mr PARSONS thought it was 80 lbs. At Cambridge, about six months ago, Professor Ewing investigated this question in the case of a 500 kilowatt alternator. The machine was examined and there was found to be no deterioration observable on the blades, and the steam consumption, when carefully measured, was found to be practically identical with what it was when tested at the makers' works by the Cambridge Company's engineer a year previously. The working pressure at the station was 140 lbs. The question of cavitation raised by Mr Hall Brown was a very complicated matter. In this question it seemed that direct experiment under the actual conditions was almost the only safe guide. Mathematics took one a very short way. Generally speaking, from experiment it seemed that cavitation was dependent upon the thickness of the blade as well as the pressures, the velocities, and slip. It was also a function of the proportion of blade area to the disc area. It was very difficult to theorise on it. In the "Viper" the forward propeller had twelve per cent. less pitch than the after one, but he attached little importance to that, and in future he thought of making them all of the same pitch. In reply to Mr Younger he might say that it was desirable to have very thin blades for fast vessels. The steam turbine blades

Mr Parsons.

were originally of cast brass, but of late years they had been made of drawn section wire, and were very strong and ductile; he might also say that at the present time in their works they had not a single case of turbines with blades for repair, though a total of about 140,000 horse power were now at work. Concerning the effect of priming on the turbines, his impression was that the water went through in the shape of spray and the pressure caused on the blades thereby was very small. The few fractures that had occurred had always been due to mechanical contact from various accidental causes. In some cases there were bolts and nuts in the steam pipe which had been stopped by the first row of guides, and these had not done any damage. On one occasion a five-eighths of an inch nut passed into the "Turbinia's" turbines and it did not hurt the turbine in the least, but it "chawed up" the nut. It was very difficult at the present time to indicate what design was the most suitable for cargo boats; one point, however, was clear that the cost of the turbines was a good deal more for a cargo boat than for a faster boat of the same horse power. In the initiatory stages it had been thought necessary to consider carefully the field for which the turbine was best suited, and it was quite enough to tackle one thing at a time. That was a very interesting question regarding the steam balance of the thrust during the rapid acceleration of the speed of the ship. He thought that on careful consideration it would be seen that the end pressure, when the steam was suddenly turned on, was almost solely that due to the momentum of the engine shaft and propeller—the difference between the torque exerted on the turbine by the steam and the torque expended on the water by the propeller; besides, it must be remembered that it was only momentary, almost immediately the revolutions reached the speed at which the torque of the steam was equal to the torque of the water. He had never seen any indication of a vortex around a screw propeller as a whole, but in the photographs accompanying the paper it would be noticed that a small spiral vortex existed just behind the tips of the propeller blades. These vortices were very curious, and they lasted for several revolutions in the wake. There was also a very curious vortex which would be seen on the last photograph of cavitation, a long hollow cavity behind the boss of the propeller. By direct experiment they had been led to modifications in the propeller which prevented the formation of these cavitations. The total weight of the "Turbinia's" machinery, including boiler and everything in working order, was one ton to every 100 horse power, in the "Viper" one ton to about 70 horse power, and in 30-knot destroyers one ton to about 55 horse power.

Mr Cleghorn inquired about the turbines separately.

Mr Parsons said that the "Turbinia's" weighed 4½ tons, and developed 2,300 horse power.

Mr Cleghorn said he would like to know something more about the largest size of engines—some of the engines proposed to be used in fast Channel steamers or larger sizes of vessels.

Mr Parsons said that with highly economical turbines and large condensers they expected to get superior economy to the best mercantile marine engine, and some saving in weight and space. As to the amount of repair he might say that on the "Viper," after completion, no repair had been carried out on the main engines. The "Turbinia's" engines had been once taken to pieces and cleaned in four years. The accounts of the electric light stations using turbine machinery showed an upkeep of under 2½ per cent. on the whole capital cost of the machinery, including boilers and auxiliaries, which was below the average of similar undertakings. It was true that a certain amount of special machinery was required to make turbines, such as suitable boring mills, etc., but the amount was not serious. With very small turbines, speeds of 5,000 revolutions per minute and upwards were necessary for economy of steam, the noise, however, became objectionable at these speeds; but at such speeds as adopted for marine turbine engines of from 300 to 2,000 revolutions there was no noise whatever. The only thing one heard was a sound like a very strong gale of wind going on inside the engines. He did not think that the turbines required to be opened except at very long intervals. Mr Napier spoke

Mr Parsons.

about a broken vane. A case of a broken vane was now almost unknown except from carelessness. The bearings might be allowed to get dry and wear to take place, but with ordinary care there was much less liability for derangement than in ordinary engines, and especially was this difference felt when superheated steam was used in the two classes of engines. They had had cases where turbines had been working alongside ordinary engines, and the repairs and stoppages were much less frequent with the turbines.

The CHAIRMAN said that, before proposing a vote of thanks to Mr Parsons, he might be allowed to add a few words, more especially to answer a remark made by Mr Hall-Brown about the coal barges to which he had referred. He did not wonder at Mr Brown's trouble with the speed of those barges; their form was something between a biscuit box and a butcher's board. He had made experiments in the tank, and the reason why the barges waltzed over the measured mile was that they had what was called an unstable following wake. That was cured by a false rudder behind.

Mr HALL BROWN—It was partially cured; it was distinctly better.

The CHAIRMAN said that after that they did not waltz; they merely corkscrewed over the mile. With regard to the cutting action of the steam on the turbine blades, he thought Mr Parsons had made it quite clear, but his firm wished to ascertain about that for themselves. They wrote to over twenty firms that had used turbines on land, and, without exception, they all replied that no cutting action had been experienced, and that the upkeep was extremely moderate indeed. One gentleman said in a postscript—"I beg to inform you that I have been looking for the cutting action for the last ten years with a magnifying glass. I shall let you know when I find it." As to the turbine vessel his firm was building, he had to report to the Institution that she was getting on very well. He hoped that she would be technically successful; it was for the public to make her a financial success. He begged to propose a hearty vote of thanks to Mr

The Chairman.

Parsons, firstly for his splendid paper, and secondly for his admirable and witty reply, but most of all for taking the trouble to come to Glasgow no less than three times to be with them.

The vote of thanks was enthusiastically accorded.

In reply to Mr William O'Brien, Mr PARSONS wrote that by calculation, assuming steam to be suddenly shut off from the engines when at a speed of 25 knots, the vessel would slow down to a speed of 18 knots from her hull resistance alone, in about 200 yards, so that the only difference required in bringing a 25-knot boat into harbour over an 18-knot boat would be, that in the case of the former, steam would be shut off 200 yards from the pier head, assuming that the reversing turbines were not used. If, however, they were used, full speed could be held till within 100 yards of the piers, and loss of time from reduced speed over that distance would not amount to more than 2 seconds; whereas the saving of time from 5 extra knots speed would be about 12 minutes, neglecting the saving of time at the starting of the vessel on the commencement of the passage, arising from the more powerful machinery and the more rapid starting power of the steam turbine machinery, as shown by the trials of the "Turbinia," "Viper," and "Cobra."

CITY UNION RAILWAY WIDENING AND EXTENSION OF ST. ENOCH STATION.

By Mr William Melville (Member).

(SEE PLATES VI., VII., VIII., IX., X., XI., XII., XIII., XIV., XV.)

Read 19th March, 1901.

The City Union Railway was authorised by Act of Parliament in 1864, with a capital of £900,000. It extended from the Glasgow and Paisley joint line, near Shields Road, to Sighthill, where it joined the North British Railway, with branches to the general terminus, St. Enoch Square, and College Green.

The line was the first to connect the railways around Glasgow south of the River Clyde, with those on the north side. Besides giving this connection with the different railway systems, the branch to St. Enoch gave a more central and suitable passenger terminus for the Glasgow and South-Western Railway Company, whose principal station in the city at that time was the Bridge Street terminus of the Glasgow and Paisley Joint Line.

The purchase of the old College of Glasgow, along with the extensive "College Green," also gave suitable accommodation for the goods traffic, not only of the Glasgow and South-Western Railway, but also, as afterwards arranged, for that of the North British Railway.

It may be interesting to some present to know, that the price paid for the old College and Green was £100,000, which sum had to be applied towards the erection of the University on Gilmorehill.

The promoters of the new line had considerable difficulty in raising the capital necessary for its construction, as from time to time they applied to Parliament for powers to raise more capital and to arrange their finances generally.

By the Act of 1867 the Directors of the line were to be elected by the Glasgow and South-Western and the North British Companies, who at this time became responsible for the dividends on the capital. After this the work of construction proceeded, and the line was partly opened to Dunlop Street in 1870, and the extension to St. Enoch Square in 1876, the St. Enoch Hotel being opened in 1879. By the time all the lines and stations, etc., were completed the total capital had risen to £2,250,000.

The St. Enoch Station and approach lines thereto became vested in the Glasgow & South-Western Railway Company in 1883.

About the year 1893, having been instructed by the Directors of the Company to consider the re-construction of the bridge over the Clyde, the author advised that a re-construction should provide for at least four lines of rails instead of two as then existing; but as there was a difference of opinion between the two Companies—the North British and the Glasgow and South-Western—as to the payment of the extra cost in widening the bridge, it was decided after long negotiations, that the City Union Line should be divided; and, accordingly, the partition took place by Act of Parliament in 1896, the lines north of College Junction being taken over by the North British Company and those south of that point by the Glasgow and South-Western Company. By this division the Glasgow and South-Western Company were now in a position to carry out its wishes, and this, along with the fact that a greatly increased development of traffic had taken place in the interval, compelled the Company to apply to Parliament in the same session that the partition took place, for powers to enable them to widen the whole line between Port Eglinton Junction (the point where the two main lines converge) and Clyde Junction (the point where the St. Enoch Station branch leaves the main line). In the year 1870, when the line was opened for traffic, there were in all 42 trains together with 42 light engines per day passing over the bridge, whereas last year (1900) there were 645 trains and 191 light engines passing over the bridge per day, an increase of 603 trains and 149 light engines.

It was not until 1898 that Parliamentary powers were obtained to widen the St. Enoch Station and the branch leading thereto.

The work in connection with the widening of the railway between Port Eglinton and Clyde Junctions was let in two contracts—No. 1 Contract in May, 1897, embracing the Clyde Bridge, Adelphi Street and East Clyde Street Bridges, and the arching between East Clyde Street and Bridgegate Street—No. 2 Contract in January, 1898, embracing the work from Port Eglinton to Adelphi Street.

The work of widening St. Enoch Station and branch under the 1898 Act was let in seven contracts as plans were got ready.

The whole of the contracts were placed with Messrs Sir William Arrol & Co., Ltd., excepting the contract for the large roof over the widened portion of St. Enoch Station, which was placed with Arrol's Bridge and Roof Company, Ltd. Messrs Morrison & Mason, Ltd., were associated with these contractors in carrying out the masonry works and the work connected with sinking the river cylinders. The extent of the widening operations embraced in these contracts is shown in Fig. 1.

WIDENING CITY UNION LINE (ACT 1896)—CONTRACT No. 1.

Clyde Bridge, etc.

As already mentioned, the old bridge over the River Clyde was built for two lines of rails, with the lines running in between the main girders. There were five spans over the river, but taking in East Clyde Street on the north and Adelphi Street on the south side of the river gave seven spans in all, of about 75 feet each. The main girders were of the close double series lattice type, 8 feet deep, the lattices being formed of channel irons and flat bars with distance tubes between the two series. The cross girders, 6 feet 10 inches apart, were also built of lattice work;

their ends being built into the bottom booms of the main girders gave very great trouble in the process of cutting away as the new bridge was being built. Between the cross girders were rail bearers, and over all flat iron plates ¼-inch thick covered with bitumen. The rails were carried on timber runners which were fixed by angle iron cleats riveted to the top of the cross girders. The bridge was carried on cast iron cylinders 8 feet in diameter, sunk to a depth of from 68 to 78 feet below ordnance datum, the cylinders were filled with concrete and brickwork in Arden lime mortar. The bridge being designed at a period when rolling stock on railways was of a much lighter weight than that at present in use, it was quite evident it was having more to do than at first intended, and the design of some important constructional details being weak, great trouble and expense were caused annually in repairs both to the superstructure and the cast iron cylinders.

A great deal of consideration was required in the design and method of erecting the new bridge so that the traffic on the old one would be interfered with as little as possible.

The cross section, Fig. 4, will show clearly the arrangement made to attain this; the tops of the main girders of the new bridge were kept about 6 inches below the lower boom of the old girders to allow– as to be explained afterwards—of the old bridge being supported temporarily on the new one, while the former was being cut away.

The cylinders for the river piers are 13 feet in diameter, and are constructed of steel plates from ⅜- to ½-inch thick with angle iron framing, as shown on Figs. 7 and 8. They were sunk to a depth of about 64 feet below ordnance datum under air pressure, and filled with 4 to 1 Portland cement concrete to a height of 10 feet 7½ inches below ordnance datum, whereupon the granite courses, 12 feet in diameter, rise, and are carried up to the seat of the cast steel bed plates for main girders. The foundation in all cases consists of very fine sand mixed with small clayey patches.

In sinkng the cylinders the space around the service tube was filled with Portland cement concrete to an amount necessary to give weight for sinking, the quantity increasing with the sinking. After reaching to what was considered a satisfactory foundation, and all the concrete filled in, with the exception of a slight quantity at the top to admit of adjustment of level for the first granite course, each river cylinder was loaded with a weight equal to the combined calculated rolling and dead load of the superstructure plus 50 per cent. After applying this test load it was found that the cylinders had subsided from ¾ of an inch to 4⅜ inches. This test was considered quite satisfactory, keeping in view the fact that the pressure at the foundation of each cylinder with full calculated rolling and dead load is 7¼ tons per square foot. The greatest skin pressure on the cylinders when sinking was equal to 2·9 cwts. per square foot, but in calculating the load on the foundation, that pressure was taken at 2·7 cwts. per square foot. Before any concrete was put into the air chamber the surface of the ground was properly levelled and the concrete well packed into the steel work, after which the whole was thoroughly grouted under air pressure with Portland cement.

All the cylinders were sunk in very fair line in every direction with one exception. Great care and precision was necessary to attain this, as the amount of space available between the shell of the cylinder and the granite pier to be built therein was but 6 inches.

The cylinder, which unfortunately did not keep to the perpendicular, was No 7, Fig. 3. Good progress had been made in sinking it until about 30 feet below ordnance datum, when it was found that it had gone about 1 foot off its course up stream and 9 inches towards the south side of the river, in which position it lay for some time. In attempting to get it back to its correct position, by some blunder on the part of those in charge of the sinking, the cylinder went still further off its course. By this time it was practically at the depth intended to go, and it was now impossible to get it righted. The method adopted in strengthening and getting the bed for the granite into correct line and level was by placing a new caisson — 20 feet in length, 15 feet in width, and 26 feet high, rounded at both ends — around the canted cylinder, and sinking it to a depth of 33 feet below ordnance datum, by excavating the material between the two cylinders (a laborious job), and filling the space with concrete. This has proved quite satisfactory, as the material through which the pier was sunk—fine sand with only a trace of clayey matter—is of the very best description for such work. This mishap can only be attributed to gross carelessness on the part of the workmen in charge, and with ordinary care should not have happened. It is pleasing, however, to say that this is the only regrettable mistake which has taken place in connection with the works so far.

As will be seen from Fig. 3, the positions of the new and old cylinders are closely placed together. This accounts for the size of the former being limited to 13 feet in diameter, otherwise the author would have preferred them to be somewhat larger in diameter. About a foot space was left between the two to ensure that in sinking there would be no likelihood of the one coming in contact with the other.

Being in possession of the actual depth of the piers of the old bridge, it was decided that the new piers should be sunk to a depth within 2 or 3 feet of the piers of the old bridge, so that in the case of accidental blowing, the foundations of the old piers should not be affected.

The cost for wages only of the excavations in the river piers was practically 6s per cubic yard. The time taken to sink one river cylinder was about 400 hours, but as much as 24 cubic yards was excavated in a shift of 10 hours. The greatest pressure used in sinking the cylinders was 32 lbs. per square inch.

A temporary staging was erected across the river, extending beyond each side of the bridge, with bogie roads on either side, on which all the material for the piers was conveyed from the north or the south side as required. This staging was also used in the erection of the superstructure.

The author is indebted to Mr Crouch, who acted as resident engineer to the City Union Railway during the construction of the old bridge, for valuable information as to the nature of the material in which the piers were sunk.

The abutments on the north and south banks of the river are founded on steel caissons, Fig. 9, somewhat similar in construction to those for river piers, but varying in size and shape, some being 22 feet in length by 13 feet in width, while a few are only 6 feet in diameter, these latter having been sunk by the ordinary grab, and the larger ones by air pressure. A sufficient foundation for the land cylinders was got at 54 feet below ordnance datum, and they were filled with concrete similar to those for the river piers. The masonry of the abutments above the cylinders facing the river is of ashlar carried by arches, and that facing the street of ordinary rubble, faced with white enamelled bricks. The masonry towers and pilasters are all of cube ashlar, Fig. 2.

In the erection of the main and cross girders, as stated, the river was staged from side to side. This staging was constructed of timber piles and beams; and as the Company were bound by Act of Parliament, while constructing the bridge, to preserve open the navigation by at least one opening under each of the old and the new bridges, arrangements were made to have one span made so that it could be easily removed to accommodate the navigation above the bridge, which, however, was slight.

The main girders of one end span and part of the next span, with all the cross girders in position, were fitted together in the contractor's yard, and the different parts riveted up, when they were removed in sections for erection on the site of the work. All the other main and cross girders were fitted up separately at the yard, and afterwards dealt with in a similar manner.

Before the erection of the steel work commenced the cast steel bed plates, with rocker plates and rollers, were carefully fixed in position, Fig. 5. This being done, the main girders were then erected in position upon the bed plates in sections to suit the jointing of the booms, Fig. 6. There were five sections to each girder, and these were supported from the temporary staging by upright timber posts; as they were fixed in position the cross girders were also fitted between, these likewise being supported from the staging. The girders of the centre span are fixed to piers at each end, the others being loose. When each span was entirely fitted together (main and cross girders) the whole was then riveted up. After this operation, so much of the superstructure of the old bridge was then blocked up upon the newly riveted structure; this allowed of the old main girders of that span being cut away from the cross girders, the weight of the traffic being now sustained by the new span. On the widened space on either side of the old bridge the new longitudinal bearers carrying the curved floor plates were laid and riveted to the new cross girders. The main girders of the old bridge in the meantime being cut into pieces, with the exception of the bottom booms, and disconnected from the flooring and old cross girders, were then removed; at the same time all riveted connections in the flooring girders were cut and temporary bolts inserted. While the cutting away of the old work was in operation, the longitudinal flooring girders and curved plates for the central part of the bridge were being riveted together upon a space immediately adjoining the main line, south of the bridge. These sections of the flooring varied in length from 19 feet to 32 feet, which was considered sufficiently long to be dealt with in fixing them into their permanent position, in the limited time at disposal. This was accomplished without interfering with the traffic, the work being done on Sundays when the line was clear, between the hours of 8 a.m. and 8.30 p.m. As soon as possession of the line was obtained, so much of the permanent way on that part of the bridge to be dealt with was removed. The removal was carried out by the aid of one 15-ton steam breakdown crane at one side of the gap made by the lifting of the rails, and one 10-ton hand crane at the opposite end. By these cranes the cross girders and flooring of the old bridge were removed in parts and put into wagons, after which the 15-ton crane picked up a section of the new flooring, and deposited it into position with the assistance of the 10-ton crane. Two sections in width were laid in one day, while they were also riveted to each other and to the end of those previously fitted into position. The space between the new and the old work was made up with timber in a temporary manner, after which the permanent way was restored; that part over the new work being carried on cross sleepers and ballast. This part of the work required the greatest attention and care, and throughout was carried on without a hitch. There was a considerable amount of riveting to be done after this operation, to connect these portions of the flooring with those already fitted on each side of the bridge, and most of this could only be done as the lines of rails were slued at different times to admit of the bridges over East Clyde Street and Adelphi Street being put into their position. The whole of the flooring is covered with bitumen concrete averaging about 3 inches thick. This also could only be put in on Sundays and at times when the lines were slued in temporary positions. Drainage is provided for by gratings at intervals. The curved flooring plates are ½-inch thick. The floors of all the bridges on the works are of somewhat similar construction, and they allow of a sufficient depth of ballasting, a point of the utmost importance in maintenance of the permanent way.

The rail guards on each side of the bridge, having steel checkered plates on top, are constructed so as to be suitable for a side walk for the plate-layers and others. Recesses over each pier are also provided.

The granite in the piers is built in solid courses each 24 inches in height, bedded in cement mortar, and is from the Shap granite quarries.

The octagon-shaped pilasters above the granite, and the four ornamental towers at each end of the bridge, are built of cube ashlar of Dumfriesshire red stone set in cement mortar.

The parapet and the cornice, etc., underneath, is of an ornamental character in cast iron. These are fitted and bolted to steel brackets and framing fixed to the main girders.

The whole superstructure is extremely rigid and should give little trouble to maintain.

WIDENING BETWEEN ADELPHI STREET AND PORT EGLINTON JUNCTION.

The old line between Adelphi Street and Port Eglinton Junction being of a tortuous nature, with somewhat heavy gradients, and the bridges spanning the various streets having become too light for the ever increasing loads imposed upon them, advantage was taken to improve the curves and the gradients, the line being raised at one part as much as 2 feet 9 inches. All the old bridges were removed, and new ones erected suitable for the altered lines. The permanent way over the old bridges was carried on timber longitudinal runners, a most unsatisfactory system for maintenance where there is a heavy traffic. By the raising of the line, sufficient depth was obtained to construct the new bridges to carry the permanent way on sleepers and ballast; the rails being much easier to maintain to line and surface than by the old method, the form of decking adopted being made to suit the circumstances of each individual bridge. These will be described in detail.

The old station at Main Street has been completely swept away, and a new and more commodious one placed further west, having access at one end to the important thoroughfare of Eglinton Street. Access is also provided to Cumberland Street from the east end of the station, this point being only 200 yards from the entrance to the old Main Street Station, thus maintaining the traffic which that station accommodated.

The old station being on a gradient of 1 in 100, with a curve of 15 chains radius, made it difficult to work with heavy trains. The improvement on the levels of the line has enabled the new station to be on a gradient of 1 in 206, while a considerable portion of the line at this part is practically straight. Platform accommodation is provided to each line of rails, namely, four.

Between Adelphi Street and Gorbals Junction a fifth line, in the form of a loop, is laid to the south or up side of the main running lines. This loop is provided for the use of goods and empty carriage trains.

In the construction of the works it was of the utmost importance that the traffic on the railway should be carried on uninterruptedly, and for this purpose some of the old bridges had to be removed bodily from their position on a Sunday, and part of the new bridges substituted, to enable the working of the trains to be resumed that night. The bridge over East Clyde Street, being a typical example, will be described in detail; the others having been removed in a similar way, differing only in the amount of tackle and precautions required, it is unnecessary to go so fully into these. Other bridges required to be slued a few inches from their old position to admit of the new portions being built in their final positions, and in one instance it was necessary to cut a few inches for some length off the bottom flange of a large girder.

As parts of some of the bridges and arches of viaducts were finished, it became necessary to divert the traffic over such portions to enable the remaining parts to be constructed; and, the configuration of the lines being so radically altered from the original, this process of diversion required to be done several times during the progress of the work, and entailed very considerable labour and expense. Indeed, it may be said that the portion of the work between Adelphi Street and Port Eglinton presented the greatest difficulties, and required greater attention than any other part of the whole work.

EAST CLYDE STREET BRIDGE.

This bridge has a span of 60 feet, and is skewed on plan, owing to the junctions to St. Enoch Station coming off at this point. It consists of two outside lattice girders, 9 feet 6 inches deep and 21 inches wide, and one centre double-webbed plate girder, varying in depth from 4 feet 6 inches at the abutments to 7 feet 6 inches at the centre, and 32 inches wide. The cross girders, which are spaced at 7 feet 9 inches apart, vary in depth from 2 feet 4 inches to 2 feet 11 inches. The rail-bearers consist of 14-inch by 6-inch rolled steel joists laid at 3 feet 10 inches apart, and, owing to the want of head-room, are let in between the cross girders. The deck consists of ½-inch buckled plates, and is covered over with bitumen concrete to a depth of 3 inches.

For the erection of this bridge the staging was constructed wholly of timber the full width of the street, Fig. 11, and extended under and on both sides of the old bridge, for a sufficient distance on the east side to enable the first half of the new bridge to be erected and riveted together thereon, and on the west side for a distance to allow of the old bridge being cut down and removed, as well as to admit of the erection of the second portion of the new bridge.

The first half of the bridge was built on the staging, with its centre line exactly parallel to that which it would finally occupy. On a Sunday previous to this part being shifted, the granite beam blocks for the centre girder of the bridge were laid. Their position being foul of the old bridge, considerable difficulty was experienced in the operation. After this portion of the bridge was riveted together in its temporary position on the staging—and the bitumen concrete laid upon the decking to receive the permanent way—it was jacked up to such a height as would admit bogies to be run on rails fixed upon the staging underneath. Eight bogies were so placed—four on each end of the bridge. On the morning of a stated Sunday the line was closed to allow of the final operations of removing the old bridge and placing the half of the new one in its final position. It was also necessary to remove so much of the top masonry of the old abutments, to be ready for jacking up the superstructure of that bridge to such a height as would admit of bogies (with the necessary bearing logs) being placed under the main girders—one bogie under each end of both girders.

The old bridge was lowered on to bogies, and removed from its old position, when the bogies, after having been relieved, were requisitioned to assist in carrying the new portion of the bridge to its final position.

The moving of both bridges was done by winches and wire ropes.

After the new bridge had been lowered on to the beam blocks, the beam-filling was built, and the permanent way restored to its altered position. While these Sunday operations of removal were taking place, the Company's platelayers were occupied in slueing the lines of rails into a position to meet the new conditions.

The number of hydraulic jacks used in lifting was four, with 10-inch and 12-inch rams. The actual weight of the portion of the bridge lifted was 130 tons. The whole of these operations were carried out in a most satisfactory and careful manner under the personal supervision of Mr Biggart, of Messrs Sir William Arrol & Co., Ltd. Fig 11 shows the staging for the erection of this bridge and the different positions occupied by the old and new girders.

ABUTMENTS.

The abutments of the bridges are built of large flat bedded rubble masonry having a base of dressed ashlar 2 feet 6 inches above the level of the pavement. The quoins are formed of polished red stone from Dumfriesshire, and project beyond the face of the masonry, which is covered with white enamelled brick tiles. Openings, generally 7 feet wide, have been formed in the new abutments, giving access to the arches behind, carrying the railway. The beam blocks, whether for main girders or other girders, are of granite. They are of many sizes, the largest being 7 feet by 6 feet 6 inches by 20 inches deep, and weighs about 5½ tons. They are nidged on the face, and laid flush with white enamelled facing bricks. Where projecting stringer or other courses existed in the old abutments, they were reduced to the same plane as rubble abutments, and faced similar to the abutments. All angles on the abutments have specially-formed enamelled bricks fitted to avoid sharp corners.

MASONRY VIADUCTS.

These are constructed of masonry piers of rock-faced ashlar, generally 4 feet 6 inches thick, with the necessary headers, Fig.

10. They are founded on two 12-inch courses of concrete, with 6-inch scarcements, under which there is a bed of 4 to 1 cement concrete 2 feet thick and about 9 feet wide.

The arches are generally 25-feet span, with a rise of 8 feet from the springer. They are built of 5 rings of brickwork set in cement. The ringheads and 4 feet of the soffit from the face of the arch are faced with blue Staffordshire bricks. The springers for arches are of ashlar 9 inches on the face, and some meet at the centre of the piers and others go right through the piers.

The new masonry and brickwork is bonded at regular intervals into the old work. The spandril walls are of a similar description of masonry as the piers, the haunching between being of 4 to 1 cement concrete, with sufficient slope formed to provide proper drainage. The whole surface over the arches and haunching, as well as the inside face of the spandrils, is covered with a layer of cement finishing 2 inches thick, in proportion of one of cement to two of fine sand. This covering has given the utmost satisfaction, being perfectly watertight, with the exception that where the old and new work joins, a slight settlement has taken place, this being unavoidable. Hand-set drystone drains are formed on top of the cement covering, in the valleys between the arches leading to the outlet cesspools, which are of cast iron, having a movable perforated top. Connected to these are heavy cast iron outlet pipes built through and fixed down the outside of the spandrils and piers, and led into the fireclay pipe drains running alongside the viaduct. Suitable inspection eyes are placed in the cast iron outlet pipes. The whole space on top of the arches to formation level is filled up with slag, ashes, or other dry material.

Ashlar parapet walls are placed on each side of the viaducts, and refuges formed at each alternate pier carried out on ashlar moulded corbels on the spandril walls. On top of the ashlar parapets is fitted a railing 3 feet high, consisting of ornamental cast iron standards, through which two rows of 1½-inch tubing run. The general design of arching adopted throughout the work is shown in Fig. 10.

STEEL WORK OF BRIDGES FROM THE CLYDE TO PORT EGLINTON.

ADELPHI STREET.

This bridge has a span of 70 feet, and consists of two outside lattice girders 9 feet 6 inches deep and 21 inches wide, and one centre double-webbed plate girder varying in depth from 6 feet at the abutments to 7 feet 6 inches at the centre, and 28 inches wide. The outside girders have cast iron ornamental grills fitted between the lattice bars, as shown in Fig. 2. Ornamental cast iron brackets resting on stone corbels, built into abutments, are placed under the end of each outside girder; these are also similar in design to those at the East Clyde Street Bridge. The cross girders, which are placed 7 feet 11 inches apart, are built of web plates 2 feet 3 inches deep, with 13-inch flanges, and rest on the bottom flanges of the main girders. On top thereof, running parallel to the main girders, rolled steel girders 12 inches by 6 inches are laid 3 feet 10 inches apart, on top of which ½-inch-thick dished floor plates are riveted. Curved ballast plates, ½-inch-thick, are fixed from the floor of the bridge against the outside main lattice girders. The whole floor plates are covered over with bitumen concrete 3 inches thick at its thinnest part; the bottom booms between the webs of the outside girders are filled up to the top of the webs with similar concrete. This is done at all outside lattice girders having double web plates.

BRIDGE OVER GOVAN STREET.

The span of this bridge is 60 feet. It carries five lines of rails, namely, the four main running roads and the loop line already mentioned. There are four main plate girders—two outside and two inside—which are spaced between centres, 24 feet 2 inches, 23 feet 3½ inches, and 13 feet 0½ inches respectively. The two outside girders are 6 feet deep over the angle irons, and have parallel flanges 21 inches wide. The two centre girders are 7 feet deep at the centre, and 5 feet deep at the ends, and are hog-backed, the flanges being 24 inches wide.

Plate cross girders are placed between the main girders resting on the bottom flanges. They are spaced 5 feet apart, and are 2 feet 9 inches deep, and have flanges 14 inches wide. The floor of the bridge is formed with buckled plates ½-inch thick, riveted to the top flange of the cross girders with tee irons 6 inches by 3 inches by ½-inch riveted over the longitudinal joints, the whole area being covered with bitumen concrete.

A cast iron ornamental parapet is fixed on the top of each outside girder. It is 3 feet 3 inches in height, formed in moulded panels, with standards every five feet, having a moulded cope surmounting the panels.

Bridge over Rutherglen Road.

The span is 60 feet, and, to provide a clear floor space, all the main girders are placed under the railway. This was essential here, as part of the complicated points and crossings in connection with the Gorbals Junction are placed over the bridge, which has a clear width between the parapet girders of 62 feet. There are 12 main girders under the line. They are placed 4 feet 9½ inches apart, and are braced together by two series of diagonal bracing composed of angle irons. These girders have web plates 5 feet deep and from ⅜-inch to ½-inch thick, and flanges 18 inches wide. The two outside girders, which are 6 feet 2 inches deep with 16-inch flanges, form the parapet; the bottom flange carries the floor plates, which, in the case of the girders under the line, are carried by the top flanges. The flooring is constructed of inverted curved plates, ½-inch thick, laid between the main girders and riveted to their top flanges, and is covered with bitumen concrete.

Bridge over Greenside Street.

This bridge is of a similar construction to that over Rutherglen Road. The span, however, being only 40 feet instead of 60 feet, as in the former case, the girders are only 4 feet 6 inches deep.

Bridge over Main Street.

The design and constructional details of this bridge are similar to that of the Cumberland Street bridge, which is illustrated, the only material difference being in the plan. In the case of the Cumberland Street bridge four columns are introduced under the two outside girders, whereas in the case of the Main Street bridge these were not required, the span being much less than in the former case. The width of the street is 65 feet, but the angle of crossing gives a span of 101 feet.

The line of the main girders is parallel to those of the old bridge. It was necessary, however, to shift the old bridge bodily 9 inches to one side, to admit of one-half of the new bridge being built in its permanent position while the traffic on the old line was being carried on without interruption.

Bridge over Cumberland and Surrey Streets.

This bridge crosses diagonally over Cumberland Street at a point where that street intersects Surrey Street, making it irregularly shaped on plan, Fig. 13. The whole area over the street covered by the old and new bridges was staged to allow of the new bridge being built and the old one being removed. Unlike the Main Street bridge, the main girders of the new bridge were not parallel to those of the old bridge, and hence there was considerably more trouble in its erection. It was first of all necessary to remove a short length of the northmost old girder, and support the cross girders with timber which were previously supported by this part of the removed girder. Besides this removal it was also necessary to cut away a considerable length of the bottom flange of the remaining part of the girder tapering from nothing to 4 inches. These operations allowed of the centre main girder being built in its permanent line. It is a bowstring lattice girder, Fig. 15, has a span of 112 feet, and is 13 feet 6 inches deep at the centre and 3 feet 6 inches at the ends, the flanges being 30 inches wide. The booms have each three webs, 14 inches deep and $\frac{5}{8}$-inch thick; the three webs are carried throughout, and are connected together at the three end bays of the girder by the lattice bars, the rest of the girder having only the two outside webs thus connected. The diagonal lattice bars are composed of channel irons and flat bars; the vertical members are built of four angle irons, two on each outside web which is stiffened by distance pieces in each direction. This girder was built somewhat higher than the finished level, to admit of the beam block being put into position, which required to be done on a Sunday, the block weighing over 5 tons. The girder was then lowered on to its permanent bed, and the cross girders were brought to the ground all riveted up and placed in position. While the main centre girder was being riveted together, the erection of the west outside main girder was being proceeded with at a short distance out from its permanent line, to admit of the cross girders being slipped in between that and the main centre girder. After all the cross girders were finally placed in position, the outside main girder was then drawn into position and riveted up to the cross girders.

The main outside girders (see Figs. 12 and 14) are of the parallel lattice type; they are 10 feet deep, with flanges 21 inches wide, having two web plates in each boom 10 inches by $\frac{7}{16}$-inch. The space between the web plates of the bottom booms is filled to the top of the webs with bitumen concrete to prevent lodgment of water and refuse which gives so much trouble in causing corrosion.

The cross girders are placed 8 feet 8 inches apart, Fig. 16. They are plate girders 2 feet 10½ inches deep, with flanges 13 inches wide and ½-inch webs. Riveted on top of these are longitudinal bearers placed 3 feet 11½ inches apart and 12 inches deep, built of web plates and four angle irons; these in turn carry the curved floor plates ½-inch thick as described for other bridges. The floor plates next the main girders are curved upwards for some distance and riveted to these girders to form ballast guard plates, the whole surface of the flooring plates being covered with bitumen concrete as already described.

The outside main girders are surmounted on the outside edge of the top boom by a cast-iron moulded cope 14½ inches deep, the spaces between the lattice bars are fitted with diagonal lined timber panels made to be easily removed to admit of painting the steel work, and the insides of all the main girders are lined up with creosoted timber, likewise fitted to be easily removed. The details of these girders are shown in Fig. 18.

Each of the outside main girders is supported between the abutments by two columns which are placed in each case on the edge of the street pavements; they are built in section with six bevelled shaped channel irons with tee irons between, the whole being riveted together with a sufficient sole plate and cap riveted at each end. The columns are covered over by an ornamental cast-iron casing in circular form, with moulded cap at the top surmounted by ornamental brackets, Fig. 17.

After the westmost half of the bridge was completed, as well as portions of the other bridges in proximity, the traffic was diverted from the old line to the new, and the old bridge cut in pieces and removed—a most laborious piece of work. This done, the remaining operations for the completion of the whole structure were of a simple nature; the cross girders were placed as for the westmost half of the bridge, and the eastmost main girder then built into its permanent position.

BRIDGE OVER SALISBURY STREET.

This bridge has a span of 60 feet on the square and 63 feet on the skew. The bridge carries two double lines of rails, with a platform between each double line, and one on each side of the bridge. There are six main girders in all; four of these carry the two double lines as well as the edge of each platform; the other two girders are placed each at the outside of the bridge, and while carrying the outside of the platforms they form parapets to the bridge.

The four main girders carrying the rails are 7 feet 9 inches deep and have flanges 24 inches wide, the web plates varying from ⅝-inch to ½-inch. These girders are placed 24 feet 6 inches apart from centre to centre. Cross plate girders, 3 feet deep, 15 inches wide, and spaced 10 feet apart, rest on the bottom flange of the main girders to carry each double line of railway.

Longitudinal bearers, placed 3 feet 9 inches apart, are riveted to the top of the cross girders. They are 15 inches deep, and have web plates ⅜-inch thick with two angle irons at top and bottom, each 3½ inches by 3½ inches by ½-inch. Buckle plates ½-inch thick are riveted to the top of the bearers, the cross joints of which have tee irons riveted to them. The whole floor has a watertight covering, as in the other bridges. Ballast guard plates are fitted to each of the main girders carrying the lines of rails.

The centre platform between the two double lines of rails is carried on top of two main girders by light cross girders 5 feet apart, and the ends project beyond sufficiently to form the edge of the platforms. The outer platforms have somewhat similar girders, the one end of which is carried on the top of one main girder, the other end being riveted to the under side of the boom of outside main girder, which forms the parapet similar to that of the Abbotsford Place bridge.

Buckled plates ⅜-inch thick are riveted to the top of the platform cross girders with tee irons over the cross joints, and the top surface covered with a layer of cement concrete, brought to an even surface ⅝-inch under the finished level of the platform to admit of a layer of Seyssel rock asphalt ⅝-inch thick being applied. A teakwood cope, 12 inches by 6 inches, is bolted to the top of the platform girders to suit the curve at this place. The erection of this bridge was done in parts somewhat similar to that of the East Clyde Street bridge, the main outside girders and the platform cross girders being erected during ordinary working days.

Bridge over Abbotsford Place.

This bridge has a span of 75 feet, and has the same lines of rails and platforms to carry as that over Salisbury Street. The span, however, being greater, necessitated the main girders being of a different design. They are of the Warren lattice type, 7 feet 4 inches deep, having flanges 27 inches wide, the webs of which are double, being 15 inches by ⅝-inch throughout, the top flange webs being stiffened on their under outside edge by angle irons. Ballast guard plates are fitted from the under side of the top boom to the top of the cross girders.

The platforms are covered and finished in the same manner as those at Salisbury Street, a teakwood cope also being fitted at the edge of the platform.

The two outside main girders forming the parapets are of similar construction to those at Salisbury Street, but are 6 feet 3 inches deep with 21-inch flanges.

The position of the bridge in relation to the old one over the same street enabled the southmost half to be constructed in its permanent position, without interfering with the old one or with the traffic. As soon as the traffic was running on this part of the bridge the old one was removed and the remaining half of the new one erected. It was erected and riveted together on staging, which also served for the removal of the old bridge.

BRIDGES OVER EGLINTON STREET.

The east abutment is similar to others already described. The west side is carried on a granite pier. The space between the street and the Caledonian Railway adjoining being limited, it was considered necessary to do so. These bridges—there being two—have a span of 75 feet 9 inches each; they carry a double line of rails placed between two main outside plate girders of the hog-backed type, 8 feet deep at the centre and 6 feet at the ends, with flanges at top and bottom 22 inches wide. The webs are stiffened on both sides by plate and angle iron and by tee iron stiffeners alternately, placed 5 feet apart. The main outside girders are 27 feet 6 inches apart between the centres.

The flooring consists of built troughing laid on the top of the bottom flanges of the main girders. It is 16½ inches over all, the top being formed with a splayed  iron 9 inches broad, the bottom having a similar iron but made 12 inches broad. The web plates are ½-inch thick, and are inclined from top to bottom by the splayed  irons. The object of having the bottom flanges of troughing wider than the top flanges is to give greater space for the packing of sleepers which are placed therein. Midway between the two main girders and on top of the trough girders a shallow stiffening girder is placed along the whole length of the bridge. In each trough gussets are riveted, reaching to within 3 inches of the bottom. The webs of these in turn run right to the top of the shallow girder between two 12-inch by 3½-inch channel irons, which form the web thereof. The top flange has a 9-inch plate riveted to the channel irons. The troughing is spaced at 2 feet 6-inch centres. Creosoted timbers, 9 inches by 3 inches, are laid inside each trough, having the top surface 4½ inches above the bottom of the trough. These are run all round with bitumen, thus making a perfectly watertight surface. At each side of the bridge, small brass tubes are fitted through the timber and bottom flanges of the trough to carry water therefrom into a gutter fixed under the flooring, which leads to conductors placed on the face of each abutment. From thence the water is led into the main sewer in the street. To prevent the small outlet pipes getting choked by fine ballast or refuse, curved perforated guard plates are fitted over the pipes at the ends of each trough. These are made to be easily removed. At a distance of 6 inches from the web of the main girders, gussets are riveted in each trough and the space between the gussets and the web of the main girders filled with bitumen concrete. This prevents any water or refuse coming into contact with the main girders.

The whole of the flooring, as well as that on the adjoining bridges, which are a continuation of this, is similar to that adopted on the Tay bridge, with the exception that the author considered it desirable to introduce the centre stiffening girder; and the result is that a stiff and strong floor has been produced. The tops of the troughs have also been covered with a thin layer of Seyssel asphalt and the inside of the troughing coated with a solution of pitch and oil instead of paint.

BRIDGE OVER SALKELD STREET AND THE CALEDONIAN RAILWAY.

This bridge carries a double line of rails by two outside main girders, carrying a trough floor of the same details as that just described for the Eglinton Street bridges. Owing to the space at the disposal on the Caledonian Railway it was necessary to erect the bridge on staging over Salkeld Street and on ground to the west thereof. Bogies were placed under the structure and the whole run into position.

EGLINTON STREET STATION.

There are four platforms, two outside and one island, each 735 feet in length; the side platforms vary considerably in width, the island one is 34 feet wide at its widest part and 20 feet at the narrowest.

The station, which has booking office accommodation at both ends, extends from Eglinton Street to Salisbury Street, and has access to all platforms by subways and stairs. The booking office at Eglinton Street is situated on the left hand side of the entrance booking hall on the level of that street. On the right hand side is a spacious parcel office. Accommodation is also provided from the entrance hall by hydraulic hoists to each platform, for parcel and luggage traffic. The fronts of the booking and parcel offices are panelled in Austrian oak of a neat design. The walls of the hall and the offices, subways, and stairs are covered with white enamelled tiles or bricks. The hall is well lit from the street and by prismatic glass on the centre platform above. Two stairways lead from the hall to a spacious subway at a level about half-way to the platforms, each of which is reached by a stairway from the subway. The subways and stairways at Salisbury Street end are finished in a similar manner; the stairways leading direct to the platforms being, however, covered over by neatly designed structures with rubber brick dado, over which the structure is teak, oak, and glass All the platforms are laid with Seyssel asphalt.

The platforms are covered over with verandah roofing, constructed of steel, and entirely covered with glass. Timber screens hang down from the roof girders over the edge of each platform, leaving the space over the running lines open above. Waiting-room and station staff accommodation is provided on each platform, of similar design and construction as the coverings over Salisbury Street stairways, the inside walls being lined with yellow pine stained in colours.

WORKS UNDER THE ACT OF 1898.

Widening of St. Enoch Station and Branch.

The works embraced under this Act are the enlargement and improvement of St. Enoch Station, as practically the station extends the whole length of the Branch.

The present Station with its beautiful and massive arched roof, its long and spacious platforms, and the finely situated hotel and offices, ranks as one of the finest stations in the Kingdom, and it reflects great credit on the engineer who designed it and to the Railway Company who own it.

The Station, including hotel and offices, covers an area of 44,000 square yards. There are six platforms, having an area of 11,000 square yards, and they vary in length from 810 to 970 feet, and are in breadth under the main roof about 30 feet each. There are two bays with three lines of rails, and one with two lines. The clear width of the station roof, which is in one span, is 198 feet.

Trains can depart or arrive at all the platforms, and these being of such length can easily accommodate two ordinary trains, and frequently they are required to take three.

Engine shed, with coaling, watering, and turntable accommodation is also provided in the Station.

The area covered by the widening extends to 21,700 square yards, making a total of 65,700 square yards for the whole Station as enlarged. The Railway Company deserve credit as philanthropists to the City of Glasgow; the area taken in having swept away a considerable portion of the worst slum property, part of which the Corporation had scheduled in their Improvement Bill of 1898 to be removed, but by the action of the Railway Company they were thus relieved, and as a consequence that area is now an open space with the Railway thereon.

To the area covered by the extension, however, has to be added 11,380 square yards which the Company had to acquire, partly for the purpose of making new streets, and partly for the widening of Howard Street. By agreement with the Corporation, the Company are to widen that street from St. Enoch Square to Stockwell Street from 40 feet to 50 feet, and also to construct an extension thereof from Stockwell Street to Bridgegate Street. The Company are thus in possession of all the property south of the Railway to Howard Street.

In the extended portion of the Station there are 6 platforms suitable for the arrival or departure of trains. They vary in length from 610 feet to 970 feet, and in width from 20 feet to 30 feet, their area being 8500 square yards. The platform of the old Station adjoining the extension is lengthened from 900 feet to 1130 feet.

The platform walls are built of brickwork to the standard section, faced with blue Staffordshire bricks; and surmounted by a granolithic cope 2 feet 9 inches wide and 4 inches thick, made in moulds under hydraulic pressure. It is intended to cover the whole area of the platform with flags of similar material from 2 to 2½ inches thick, excepting over the bridges, where Seyssel asphalt will be used.

A cab-stand 530 feet long and 28 feet wide, on a level 3 inches below that of the platforms, will be placed under the new main roof, and immediately adjoining the existing south wall of the old Station; the approach for empty cabs will be from Dunlop Street by an inclined subway 9 feet wide. It is intended to lay the cab-stand with Seyssel rock asphalt. The exit from the cab-stand will be by the existing approach road leading into St. Enoch Square. The present opening under the Hotel, which now forms the cab exit, will, however, be utilised for other station purposes, and immediately to the south of this a new cab exit, 50 feet wide, will be formed, with footpaths on either side thereof. It would have been preferable had the exit been in another direction, but the space at command would not allow of this being done.

A new booking office of somewhat similar dimensions to the present one will be placed on the platform near the buffer end of the new docks, as well as other necessary accommodation. This booking office is intended principally for the suburban traffic, which will be dealt with in the new portion of the Station.

The present Station approach from St. Enoch Square is being extended on the level of the station southwards, and this will allow of dealing with more arrival cabs setting down passengers at the station. Other considerable alterations will be made in the existing station buildings facing St. Enoch Square, such as providing greater accommodation for left luggage, a traffic which is increasing to enormous proportions. New passenger exit and access passages will be constructed, one at either end of the present booking hall, but outside thereof.

A glass shelter will be built at the outside end of the main roof, at the end of the cab stand, for the accommodation of passengers waiting for trains at that part of the station.

The existing subway at Dunlop Street, giving access to the platforms by stairways and for the booking of passengers, will be extended the whole breadth of the station, with stairways leading to the new platforms, the walls and arches being lined with white enamelled bricks. The archway immediately adjoining is used for parcels traffic, with hoists to each platform. This will likewise be extended to the new portion. The parcel office, both inwards and outwards, is situated at the north end of the archway having the public entrance to Dunlop Street, but it is under consideration to provide largely increased accommodation at the south end of the street.

The area of the extended Station to be roofed in will be 11,600 square yards. (The area of the present covering is 12,000 square yards). That portion from Dunlop Street to near Maxwell Street, which is parallel to the present arched roof, a length of about 300 feet, will be covered in one span by a circular roof, having a clear span of 140 feet, Figs. 19 and 20. The principals are of open lattice-work, single triangulation, 6 feet deep at the centre, and tapering to 3 feet 3 inches near the springing; they are 36 feet 10 inches apart, and their crowns are 70 feet above the rail level.

A steel tie rod 3¼ inches diameter is introduced between the springers, with a rise of 16 feet at the centre. This rod is supported from the main rib by 1-inch and 1¼-inch diameter steel rods. The junction of the main tie rods have screw couplings, the ties being thickened at the ends to allow of the neck of the thread to be equal in diameter to the body of the rod. The intermediate rafters are 9-inch by 4½-inch rolled steel joists, curved similar to the upper member of the main principals. They are spaced about 7 feet 4½ inches apart.

On the south side the main principals rest on ashlar piers surmounted with a heavy moulded cap 6 feet 10 inches wide, 5 feet 7 inches thick, and at a height of 15 feet above the platform level. On the north side they rest on steel brackets riveted to the back of the principals of the old roof, the whole being concealed within ashlar masonry which is brought to a finish similar to that on the south side. At the outer termination of this wall an ornamental tower is placed, with a stairway leading to the roof.

An ashlar, wall of the same description as that explained, at present exists where the old and the new roofs meet. This is to be removed with the exception of three bays at the east end, and plate box girders inserted between the present main principals which will serve to carry the rolled joist rafters of both the old and the new roofs; the primary object, however, of this is to give uninterrupted access from the cab stand to the present station.

The roof at the haunches is covered with boarding and slates, the centre portion being covered with glass in ridges and furrows between the rafters and principals, the astragals being of timber.

The area between the main roof just described and the back line of the main station buildings which face St. Enoch Square, being of irregular shape, it became necessary to introduce a different style of roofing, Figs. 21, 22, and 23. The method adopted is that of main girders at intervals of 36 feet 10 inches, each of which stretches across the station in one span, and ordinary steel truss couples, spaced 6 feet 7 inches apart, between the main girders. The whole of this roofing is covered with Pennycook's patent glazing.

Verandah roofing extends from the outside end of the main roof a distance of 425 feet over the two platforms next the old station, and 220 feet over those next the outside wall. Fig. 24 indicates generally the system of construction adopted. These roofs are entirely covered with glass.

The cost per square yard of nett area covered of the various roofs is as follows:—

Main Arched Roof, ...	£3	17	0
Annexe Roof between Main Arch and Hotel,	2	6	0
Verandah Roof, including columns and girders over rails, ...	2	9	0

The prices compare unfavourably with those of other roofs carried out by the author, but this is accounted for by the greatly increased cost of materials.

The existing station is carried on a viaduct consisting of brick piers and arches. The arches do not, however, extend on the same level for the full width of the station, but are raised to a higher level at the points where they cross the various platforms. Part of the extended station is carried on similar arches, but these have been kept level throughout, which will admit of any future shifting of the lines of rails should such be necessary. It is unfortunate that this system was not adopted in the present station, for similar reasons.

That part of the station extending east from behind the Parcel

Subway at Dunlop Street to Stockwell Street is carried on a steel structure. Rows of steel columns, carrying plate girders 4 feet deep, run at right angles to the existing station. These in turn have cross girders 11 feet apart and 3 feet deep, fitted in between and resting on the bottom flange of the main girders, on top of which 12-inch by 6-inch rolled steel joists are laid, spaced 4 feet 9 inches apart between the centres, the top of the joists being flush with the top of the main girder. These in turn carry the buckled plates, which are ½-inch thick. The whole surface over the plates is covered with a layer of bitumen concrete 3 inches thick above the crown of plates. The platform walls which are built over this portion are founded on a bed of cement concrete.

The whole surface is drained at intervals, by down pipes attached to the supporting columns.

Three of the public streets are crossed at right angles to the Station. These are Dunlop Street, Stockwell Street, and Bridgegate Street. Maxwell Street is also crossed, but this is a private street, and belongs to the Railway Company.

The following table shows the lengths of the public streets covered over by the old Station, and by the extension :—

	Present Covering.	Extended Covering.	Total.
Dunlop Street...........	65 yards	50 yards	115 yards
Stockwell Street.........	44 yards	39 yards	83 yards
Bridgegate Street.......	53 yards	17 yards	70 yards

These bridges are all carried on heavy rubble masonry abutments from which the arches of the viaducts spring. They are founded on 4 to 1 cement concrete 4 feet thick. They, as well as the existing abutments, will be faced with white enamelled facing bricks 1-inch thick. It is intended also to provide, on the platforms over the streets, several areas with prismatic glazing, to assist in lighting the street underneath. Of course, with such lengths of covering, artificial lighting will also be provided, but whether by gas or electric light has not been decided.

Dunlop Street bridge has a span of 40 feet, and a minimum headway of 14 feet 6 inches. To attain this headway, the street had to be lowered for a considerable length, this being necessary to admit of a sufficiently strong ballasted bridge being got.

The platforms are carried by plate girders spanning the street, and placed about 13 feet apart. They are 4 feet deep over the angle irons, and have flanges 16 inches broad and of varying thickness. On top of these there are rolled steel joists 6 inches by 3 inches, weighing 16 lbs. per foot, placed 2 feet apart and embedded in cement concrete 10 inches thick, the concrete being 1-inch below the underside of the joists. The whole upper surface of the concrete will be finished with a layer of Seyssel asphalt to form the surface of the platform.

The girders at the outside edge of each platform are placed 24 feet 6 inches apart, and carry on their bottom flange the cross girders covered by buckled plates on which the dock lines of rails run. They are 5 feet 10 inches deep, and have flanges 18 inches wide. The webs are protected from the ballast by a system of ballast plates, constructed so that the steel work can be got at from underneath to admit of painting.

The cross girders carrying the rails are spaced at 5-feet centres. They are 1 foot 11 inches deep over the angle irons, and have flanges 13 inches wide. Buckled plates ½-inch thick are riveted to the top flanges with 6-inch by 3-inch by ½-inch tee irons riveted over the joints at right angles to the cross girders, and the whole surface is covered with bitumen concrete.

The southmost platform girder is elevated above the platform, and forms a parapet. It is covered on the outside face with cast-iron ornamental work removed from the old parapet girder, which has been taken away.

No staging was required for the erection of the bridge, all the girders being lifted into position by a derrick from the street.

Stockwell Street Bridge differs very considerably from that crossing Dunlop Street, and is of a much heavier description, necessitating as it does the carrying of a system of complicated lines of rails, as well as two of the long platforms which extend this distance. To get the headway required from the street, it was necessary to have the main girders projecting above the rail level, with cross girders placed between to carry the lines of rails. Its construction is somewhat complicated, and only a general idea can be given. The span of the bridge on the square is 60 feet, and on the skew 65 feet; and the minimum headway is 16 feet 6 inches. The abutments are of a similar description to those of Dunlop Street, and also faced with white enamelled bricks. The existing southmost girder being unsuitable to carry the adjoining portion of the new bridge, a new girder has been laid parallel to and alongside the old one. This girder is underneath a platform, and does not bear any of the weight of the lines of rails as do all the other main girders of the bridge. Three of the main girders are of the box section type. Two of them are 6 feet 3 inches deep, and have 2-feet flanges, which are parallel, and carry the edge of the platforms as well as the cross girder for the lines of rails. The remaining one is a hog-backed girder; it is 7 feet 6 inches deep at the centre, and 5 feet at the ends. There are two other main girders. These are of the single-web construction, one of which, besides taking the cross girders, also carries the outside of a platform; the other, being the outside girder of the bridge, partly forms the parapet. The exposed webs of the main girders are protected by suitable ballast plates.

The cross girders carrying the lines of rails vary in span from 16 feet to 30 feet, and in depth from 2 feet 4½ inches to 3 feet 1½ inch. They are all placed 8 feet apart, and covered with buckled plates and bitumen concrete similar to Dunlop Street bridge; but, the cross girders being placed at 8 feet centres, it is necessary to have rail-bearers to carry the buckled plates, which consist of 12-inch by 6-inch rolled joists.

The platforms are also constructed similar to those carried by the Dunlop Street bridge.

The bridge was erected on a staging covering the whole area of the street.

Bridgegate Street bridge is of a much simpler construction than the last two described; the street being at a lower level it enabled the whole superstructure to be built entirely under the lines of rails, there being also no platforms to contend with at this point. The abutments were dealt with in a similar manner to the last two described. The most difficult part of the work was the joining of the old bridge to the new; the construction of the former being of quite a different character to that of the latter. The outside girder of the old bridge required to be removed, and this was done by supporting the cross girders attached thereto by timber supports from the street, sufficient to carry the traffic on the railway. A specially designed girder was placed in the position of the one removed, and the old cross girders as well as the new ones attached thereto; these cross girders being at different levels.

Besides this special girder there are other four main girders, three of which carry the cross girders on top, and the remaining one, which partly forms the parapet, supports the cross girders by stools resting on the bottom flange. The girders underneath the rails are braced to each other between the top and bottom flanges as well as between the bottom flanges only, there being two sets of bracing in the length of the bridge.

The extended portion of the bridge varies in span from 50 feet to 56 feet 6 inches, the abutments not being parallel.

The main girders are 5 feet in depth and have flanges 2 feet wide, the parapet girder being 5 feet 6 inches deep with flanges 18 inches wide.

The cross girders are 14 inches deep and are placed 4 feet apart. They are built of ½-inch web plates with two angle irons at top and bottom, each 4½ inches by 4½ inches by ⅝-inch, on which rest the buckled plates, which are ½-inch thick, supported between the cross girders by 6-inch by 3-inch by ½-inch tee irons, the whole surface being covered with bitumen concrete as in the bridges already described.

The leading curve into the extended part of the station is 9 chains in radius, and the sharpest curve adopted in forming the connections within the station is 8 chains in radius.

SIGNALLING.

The scheme adopted for signalling all the lines between St. Enoch station, Shields on the Canal line, and Shields Road on the City Union line is that of Sykes' system of electric lock and block.

All the semaphore and disc signals usually worked mechanically by levers with rod and wire connections, will be worked electrically by switches interlocked with the point levers.

The signals of junctions will be electrically back locked until the train signalled passes over the last facing point, thereby doing away with the signals usually fixed at each facing point. Thus one set of leading signals only is required.

Electrical facing point bars will be actuated by the trains, in place of the usual mechanical bars worked by levers from the signal cabins. All facing points, moreover, will be fitted with electrical detectors in connection with these bars and interlocked electrically with the corresponding signal.

All the running signals will be released by electrical clearance bars and treadles.

The system minimises the labour of the signalmen to a very great extent, and thereby reduces their number from that which would be required had the mechanical system been adopted.

There are four signal cabins, all of which are new, to work the traffic between St. Enoch station and Port Eglinton junction; and it is estimated that had the signalling been done mechanically 729 levers would have been required, whereas by the system adopted only 156 such levers will be in operation.

Three of the cabins are built with red terra cotta bricks and are situated at the side of the line. The cabin floor of each stands at a considerable elevation above the rails. The walls inside, being faced with white enamelled tiles, give a clean and bright appearance. All the cabins have water supply and W.C. accommodation provided. The signal cabin at Port Eglinton junction is built of timber, on top of a steel gantry which stands across and over two of the running lines of rails. This position was unavoidable owing to want of room in the vicinity.

Light steel bridges are erected at intervals over the line, upon which most of the running signals are fixed, the length of the one at St. Enoch Station being 172 feet 6 inches. It has two light single triangulation lattice girders, 7 feet deep and placed 5 feet apart, braced together in all directions; creosoted timber cleading 3 inches thick is fixed on top, and a light hand-rail is provided on each side. The girders are supported at each end on steel framing having considerable batter, there is also a similar intermediate support. The top of the bridge is 22 feet 6 inches above the rail level.

GENERALLY.

The Acts of Parliament for the works give considerable protection to the Corporation. Besides the usual protective clauses, the Company was taken bound to face, and for ever thereafter maintain, in a clean condition, the walls forming the abutments of the new and existing bridges over the streets with white enamelled bricks or tiles, and paint, as often as necessary, the under side of the bridges white.

The Company had also to construct the new bridges, and ballast the rails thereon, to prevent or minimise as far as possible noise from the trains overhead.

It had also to take means to prevent water drip from the new bridges upon the carriage-ways and footpaths of the streets. Great care has been taken in the construction of the floors of all the bridges to secure this end without the aid of sheeting underneath. The means taken has been very successful, the decks being practically watertight.

At all times by day, as well as by night, the streets under the new and old bridges are to be lighted to the satisfaction of the Corporation, wherever it is considered necessary. Prismatic glass has also, where practicable, been put in to give light to the streets below. If the Company fail to comply with these conditions it becomes liable in considerable penalties.

Great trouble is experienced in preventing corrosion and pitting of the exposed top plates of girders, caused by the accumulation of cinders from passing engines, and other matter deposited thereon. To obviate this the top surface of exposed girders of the new bridges has been covered over with a layer of Seyssel asphalt specially prepared, and so far this has been found most suitable for the purpose.

None of the steel used in the bridges is strained to more than 4⅔ tons to the square inch, with the bridge loaded by the heaviest class of engine in use on the railway.

The CHAIRMAN, Mr A. Denny, said they were very much indebted to Mr Melville for his paper, which would be published in the transactions, and especially for the clear way in which he had succeeded in giving them a synopsis of his paper in such a limited time. The discussion would be adjourned till the next meeting.

Discussion.

The discussion on this paper took place on 23rd April, 1901.

Mr C. P. HOGG (Member) remarked that some nineteen years ago he read a paper before the Institution on the St. Enoch Station, and at that date he had little idea that in his time the station would practically come to be doubled. To the increase of railway traffic there seemed to be no finality, and Mr Melville's paper was particularly full of interesting points to those who were called upon to deal with such a matter as the widening of the City Union Railway and the extension of a large central station. From the nature of the subject, it did not lend itself to very much discussion, because, after all, how to replace an old bridge by a new one could only be decided, or at least best be decided, by those responsible for keeping the traffic going all the time. With regard to cylinder sinking, Mr Melville referred to the skin pressure on the cylinder being 2·9 cwts. per square foot. He rather thought that the phrase "skin pressure" was not correct, and that what Mr Melville really meant was the friction on the surface of the cylinder when sinking. The 2·9 cwts. per square

Mr C. P. Hogg.

foot agreed very well with what he had observed when sinking cylinders in the bed of the Forth near Alloa, where it was 2·37 cwts. per square foot. That case was a particularly good example, because the cylinder, 8 feet in diameter and 74 feet deep, was sunk without air pressure. The bottom of the river was perfectly clear, and the weight on the top was known very accurately. In sinking the caissons of Dalmarnock bridge, at Glasgow, the friction was as high as 3½ cwts. per square foot. In regard to the calculation of the friction he should like to ask Mr Melville whether he took the flotation of the cylinder into account, or whether he simply deducted the upward pressure of the air from the total weight, and divided the result by the area of the embedded cylinder. Mr Melville referred to one of the cylinders going off the plumb. He would leave Mr Biggart to deal with that; but Mr Melville was particularly fortunate, seeing that the cylinders were being sunk so near the old ones, in that he had only one of them going off the plumb. It was particularly difficult in sinking cylinders close to each other to keep the second one plumb—it was much more difficult apparently to put down the second one than to put down the first. He had found that the head generally inclined to the first cylinder, and would like to ask Mr Melville whether that was so in his case. On page 231 Mr Melville referred to the gradient of the station as being 1 in 206. Should it not be 1 in 260, that being the gradient recommended by the Board of Trade? The new roof was on pretty much the same lines as the roof which Mr Melville erected a good many years ago at Queen Street Station: But what was the particular object in making the roof girders of less depth towards the springing than at the centre? It did not seem to him to follow theory in any particular way, and he would like to ask Mr Melville the particular object for that feature of the roof. Otherwise he thought it was a very suitable type. A very good roof was built on these lines some years ago at the Liverpool Central Station. The only unfortunate matter in connection with the whole scheme was that, by the nature of the ground, Mr Melville was compelled

Mr C. P. Hogg.

to put in a 9-chains curve at the entrance to a large passenger station, and he was afraid that the derailments at St. Enoch would still continue.

Mr John B. Brodie (Visitor) thought one of the most interesting and instructive portions of the work described was the removal of the old bridges. It afforded an opportunity of examining those parts of the bridges which were most affected by the straining actions of rolling loads. The bridges on the City Union Railway were practically all of one design. The main girders consisted of the close latticed type, with cross girders spaced about 7 feet apart, also of the latticed type. The most defective part in the design of the main girders was the attachment of the cross girders to them. At those points there was considerable corrosion, and the line of the bottom boom of the main girder appeared sinuous, caused, no doubt, by the bending action of the cross girders. The original stresses on the top and bottom booms were 4½ and 5 tons respectively, but latterly these stresses were increased to 5¼ and 5½ tons, without apparent injury or undue deflection, thus showing that ample provision had been allowed in the original design of the main girders for future increase in rolling loads. It had not been so, however, with the cross girders. They had been found most defective, and he calculated that before removal the stresses were about 7 tons on the bottom boom, and 6½ tons on the top boom. Corrosion had had a great effect on these bridges, and the lack of provision for expansion at the ends of the main girders had, no doubt, the effect of introducing additional stresses in the material. He did not know whether Mr Hogg, with his extensive experience of cylinder sinking, was able to say whether skin friction varied with the depth sunk. As far as he could find out, in sinking the cylinders of the new bridge over the Clyde, the skin friction did not vary with the depth; at least, from many observations taken, it did not seem to. Mr Hogg had referred to the gradient at the Eglinton Street station as being 1 in 206. The Board of Trade rules regarding a station, fixed the gradient at 1 in 260, but to have introduced a gradient of 1 in 260 would certainly have increased the depth over the old viaduct, and at the same time would have necessitated the introduction of a much steeper gradient from the end of the station to the point at which the widening works join the Glasgow, Barrhead, and Kilmarnock Joint Railway.

Mr HOGG, in answer to the previous speaker, said that up to 80 feet in depth he had not found that the friction increased sensibly per square foot.

Mr A. S. BIGGART (Member) remarked that the paper revealed the width of practical knowledge every engineer should possess who was entrusted with the carrying out of such work on a large scale. Mr Melville mentioned that the works were carried out practically by his (Mr Biggart's) firm, but he thought it was only fair to the other firm who were associated with them to say that, while his firm were legally responsible for the whole work, it was largely nominal responsibility. Messrs Morrison & Mason carried out the sub-structure, including the sinking of the cylinders and the whole of the masonry and kindred work. He thought it right to add that their work had given entire satisfaction to Mr Melville, with perhaps the exception of that tilted cylinder, for which he expressed such affection during the reading of his paper. Carrying out work of this nature was an education to all connected with it. They would observe from the cross section of the bridge over the Clyde that the rails were run on longitudinal timbers. Mr Melville had specially referred to this, and mentioned that it was a very awkward form so far as keeping in repair was concerned; in addition to that it was also subversive of the life of the bridge. Especially was this so where the longitudinal bearer-girders were so shallow in depth that, although they were riveted to begin with, it was only a short time until they were yielding, with the result that those connections, in this and the other bridges, were a continual source of trouble during the life of the structures. Not only were they a source of trouble and expense in upkeep, but they were also a source of great annoyance to street passengers walking underneath the bridge. In the bridges passing over the

Mr A. S. Biggart.

streets, wherever it had been possible, the longitudinal girders were carried continuously through, and where that was not possible, the connections at the ends of the longitudinal girders to the cross girders were much deeper and more perfect in every way than they were in the old structure. In taking down the old structure many points of interest were revealed, not only to engineers, but also to professors and students who might be studying such work with the view to becoming the designers of the future, and he strongly recommended Professor Barr, Professor Watkinson and others who arranged students' visits, to include some of these renewals in their programme. In shifting the new bridges into position, Mr Melville had referred to the number of jacks that had been employed. He said that there were usually four, but in case anyone might be tempted to take an undue risk in this matter, he thought it desirable to refer to this particular point. It would have been impossible to do the work in the time that was taken with four jacks. The old bridge had first to be lifted and shifted bodily out of place, and the new one then run into position. As a matter of fact, there were jacks at all lifting points of the old as well as the new bridges. In addition to this, it was absolutely essential in work of this kind to have a considerable number of spare jacks and other plant in case anything went wrong. The bridges had to be lifted and lowered in some cases from 4 to 5 feet. The running out was a mere incident in the affair. It only took from about 15 to 20 minutes. The weight, including plant, was in several cases over 400 tons, and safety lay in having abundance of good plant and able men on the ground ready to carry out complete and carefully prepared arrangements. In carrying out the work, as far as he was aware, no train was delayed one minute from the beginning to the end of the operations.

Mr William M'Whirter (Member) said that before the discussion closed, he would like to make a remark that had just occurred to him. On page 254 Mr Melville referred to signalling—the electrical and mechanical signalling of the trains—and more especially to Sykes' system. He felt sorry that Mr Melville had not made more of this; he was quite sure he could have done so, and the information would have been most interesting and a fitting supplement to an excellent paper. He would like to ask Mr Melville if he had considered the desirability of abandoning the old-fashioned method of the battery for such work, now that plenty of electric power obtained in and around Glasgow, introducing, as had been done in telegraphs, the use of the dynamo. He thought this would not only improve the electrical signalling arrangements, but make them very much more permanent than they had ever been. He had had a large experience in such work, and he knew that the wear and tear of the batteries used to be enormous. The unsatisfactory state of a break down at one point or another would be due, in ninety-nine cases out of a hundred, to the failure of battery power. He thought this was a subject worthy of receiving Mr Melville's attention.

The PRESIDENT said he was very sorry that Mr Melville was not present, as he should have liked to have had the pleasure of proposing a vote of thanks to him in his presence. He was certain, however, that they would all agree with him in voting Mr Melville the thanks of the Institution for a most excellent paper. He was very glad indeed that so good an authority as Mr Biggart had seen fit to speak in such terms of high praise of this paper. He could only say that the paper had been everything that they might have expected, and he had great pleasure in proposing a hearty vote of thanks to the author.

The vote of thanks was carried by acclamation.

Correspondence.

Mr MELVILLE in reply wrote that the flotation of the cylinders was not taken into account in the calculation of skin friction in sinking the cylinders. During the process of sinking no difficulty was experienced in keeping them plumb, and he fully expected to have experienced what Mr Hogg suggested. Of course guide piles were put in until the cylinder was well into the ground, and

Mr Melville.

these no doubt prevented it going off the plumb until it got a thorough hold in the ground. The roof girders were made less in depth towards the springing than at the centre because it was considered more graceful than the parallel type of girder. With regard to the 9-chains curve at the entrance to the St. Enoch Station and the fear of derailment there, he would point out that derailments were of almost daily occurrence at the necessarily acute diamond crossings until about two years ago, when he introduced a crossing protector, and since that time no vehicle had been derailed at a diamond crossing. While there was a sufficient number of jacks at disposal in carrying out the work at both the old and the new bridges, in the lifting of both only four were in actual use. However, he quite agreed with Mr Biggart that it would be injudicious to calculate on only four being required for such an operation. In answer to Mr M'Whirter he might say that the signalling was such an important matter, that it would have required a very extensive paper to deal with it.

ADMINISTRATION OF WORKSHOPS,

WITH SPECIAL REFERENCE TO ONCOST: WHAT IT SHOULD INCLUDE; ITS ALLOCATIONS AND RECOVERY.

By Mr DAVID COWAN (Member).

(SEE SHEETS I., II. AND III.)

Held as read 19th March, 1901.

IN a previous paper read before this Institution in April, 1900, oncost was defined as "the indirect expenditure incurred for the purpose of increasing the productive power of organised labour." To this end land is acquired; buildings, machinery, tools and plant, and the necessary motive power are provided; provision is made for warming, heating, and lighting the labour so employed; and an expensive staff is maintained for its management, for securing employment, for the purchase of raw materials, and for the selling of the completed products.

Remuneration of Capital.—Cost has been defined by economists as the total values of the materials, services, labour, and capital entering into any product; and the difference between this cost and the price received from the purchaser is the gain—that is the resultant of the employment of capital in the business, sometimes it is called profit. Accepting this as correct, the interest, representing the value or rent of money to those who lend it upon security for its repayment, on the whole capital invested in the undertaking is as legitimate a charge against the cost of production as are the materials and labour.

Most people, however, look upon the money so invested as a speculation, and it is assumed that the investors in the shares will themselves deduct the rent from their returns when calculating their profits. For this reason it is not here intended to include the rent or the remuneration of capital in the oncost expenses.

Analysis of these Expenses.—These are always more or less analysed in the business accounts; but, as scarcely two concerns accept the same formula, it is necessary that a form of analysis be here given as a common basis for the grounds of discussion. This is shown on the diagram, Sheet I., Fig. 1. It proceeds upon the footing that every industrial engineering undertaking resolves itself functionally into two parts—the shop and the office. The shop concerns itself entirely with the process of fabrication; the office takes care of the general business transactions with the outside public, such as the purchasing of raw materials, outside services, and the selling of the products.

The indirect expenses relating to each of these parts may be sub-divided to any desired extent. Too much detail, however, unless for special purposes, is not desirable. In this respect all that is necessary for ordinary purposes is that the elementary returns of expense are, item by item, identified as, and when, the outlays are made, with some special object of expense; extended detail, then, can always be had when desired; it is sufficient to analyse in detail when the occasion demands it.

I.—Oncosts Relating to Organised Labour.

These are the shop expenses; they fall to be considered under two grand classes—

(*a*) Departmental shop charges.
(*b*) General shop charges.

Necessity for these Sub-Divisions.—This arises from the wide differences in the rates of expense necessary to the maintenance of the several departments. Where a great variety of work is undertaken, it is evident that there must be as great a difference in the degrees in which each customer's order requires the services of the different departments. One may require the services of one department only, a second the services of two departments, whilst a third may require the services of three or of all of the departments. Thus it is apparent that, to correctly ascertain the cost of the various products, separate accounts should be kept not only of those charges relating respectively to the establishment in general, and to the shop in particular, but also of the oncost expenses special to each department of the shops.

(*a*) *Departmental Shop Charges.*—These fall to be recovered on the work specially performed in the department in which these expenses are incurred. In different departments these oncosts vary greatly as regards the ratio of their totals to that of the labour or time units directly therein expended. In the machinery department, the oncost is generally highest of all: it uses up more power, and general stores; the up-keep of gearing, machines, transmissions, and loose tools are greater; and because of the larger sums invested in machinery the charges for depreciation are also much heavier. The total oncost factor relative to the machinery department may be from four to five times greater than the corresponding factor in the drawing department, usually lowest of all. The oncost rates in the other departments—pattern-making, smithing, fitting, etc.—all differ and find a place between either extreme.

(*b*) *Shop General Charges.*—These are common to all departments and consist mainly of salaries paid to managers, common shop services, insurances, etc. These not being assignable to any one department in particular, have to be apportioned according to the most likely conjecture.

Both classes of expenses are directly incurred for the services of organised labour and are shared, more or less, by all grades; the greater the efficiency, however, of any labour unit, the lesser the share of those facilities does it require. The sub-division of those expenses, whether considered departmentally or generally, is the same in either case. Taking them in the order of column 5 of the diagram, the first to be referred to is:—

(1) *Superintendence.*—This includes salaries paid to the shop superintendent and his personal staff of assistants and clerks, the salaries of foremen, as also the stores and outservices made use of by them.

(2) *Attendance,* is the collective term here used to include the unattached labour or the occasional help required by the labour specially attached to shop orders for work; no materials or outservices fall under this heading, because anything which such labour may requisition is charged directly to the shop order on whose account it has been obtained.

(3) *Overtime Extras.*—By this is meant the allowances paid to workmen over and above their ordinary rates of wages when working time in excess of the normal shop hours. It is a common practice to charge these overtime allowances to the shop orders on which the men are actually working during these over hours; although the other charges for running expenses during the same hours are charged to oncost account. This seems inconsistent; either both items should be charged to the work or both to oncost. In the case of, say, a break down of a customer's machinery, when the cost of making the same good is of minor importance to the loss sustained by the customer through his factory being thrown idle, there is usually an understanding between parties that an extra charge should be made for working overtime; in such circumstances the extra time allowances and the extra running expenses should be charged in addition to the normal rates bearing the ordinary load of oncost.

In a general way, however, the logical course is to charge both of these extras to oncost, for the reason that overtime is only worked because the shop is either so full of work that it cannot overtake in time, when working the normal hours, or that it cannot be completed within the contract time. Had the shop not been full of work, or had a miscalculation as to the time required to complete the order not been made, this expense would not have been incurred. Hence it seems unfair to saddle the work performed with the expense which it would not have been called upon to bear if it had been done within normal hours; it is entirely a matter of accident what orders are worked upon in ordinary time and what during overtime.

If overtime rates be charged against the job, the comparison of the cost, with an identical object made at some other time at normal rates of wages, is vitiated. Neither is it possible to gauge so accurately the efficiency of the shops, and thus one of the main objects of cost accounting is stultified.

(4) *Spoiled Work* is a fruitful source of loss; it is registered automatically in the scrap heap. Here is deposited work and material lost from many causes, such as carelessness or ignorance of workmen; work lost through defects in materials which develop after work is in progress or completed; work rejected on inspection, or made wrong through mistakes of draughtsmen, or wrong instructions to foremen; work displaced through changes made by developing new machines; parts of materials or tools built experimentally to demonstrate or prove a principle to be later perfected and incorporated in some complete machine, and even complete machines are sometimes built which are total failures and arrive finally at the scrap heap.

The blame for the growth of this scrap heap may be distributed from proprietors to workmen, but still it grows, and the value represented therein comes as a direct loss or expense to the business, to be borne by the saleable product and to reduce the profit. For this reason, spoiled work, like overtime extras, should not be borne by the special shop orders with which it is immediately associated, but should be distributed as an expense over the whole products in some way or another.

(5) *Inside, or In-services.*—Under this head are included unattached drawing, experimenting, and testing machines before delivery to a customer; power, water, light, and heat; internal transport by means of tramways, overhead travelling cranes, and such-like, including lifting appliances; messenger services, cloak-room lavatories,

rents, rates, and taxes, all as specially attached to the shops: the items of expense consist of the maintenances of these services by means of operating and upkeep charges, but exclusive of repairs. Where the business owns its own premises, it of course pays no rent, unless it may be ground rent; but then its equivalent—the rent of the fixed capital—must not be lost sight of. More has to be added for profit to pay a dividend on the investment.

(6) *Repairs.*—The term "repair" is generally understood to mean restoration after injury or dilapidation, to amend an injury by an equivalent, to make good for all practical purposes as it was before. In this sense, the expenses falling under this head are varied. A distinction is necessary between repairs and renewals, a renewal meaning to make again absolutely, to restore to its first or original condition. Renewal charges do not, therefore, fall under this head; but, when such a renewal is justifiable, it forms a proper charge against the depreciations account. The line of demarcation between renewals and extensions is sometimes difficult to define. If a worn-out appliance be replaced by a new one of greater capacity, and at an increased cost, then the difference is an extension, and falls to be debited to some investment account. More money may be spent on repairs than the thing repaired is worth; their general effect, however, is to prolong life, and to some extent they influence the charges for depreciation.

(7) *Insurances.*—These, as regards the shop only, should be included in shop oncost charges, and may be classified as insurances against fire on shop buildings, machinery, tools, drawings, and patterns; insurances against damage through accidental explosions of steam boilers, and against loss arising under the Employers' Liability Acts, and the like. There are other contingencies not insurable outside, such as loss arising through strikes and combinations of workmen, which must be covered in some way or another. Consideration thereof, however, falls to be dealt with later.

(8) *Depreciations.*—It is evident to all that everything about a workshop wears out after a time. The length of time required to wear out the various parts varies greatly under different conditions, but no matter what their conditions are, the building or machine, or whatever else, becomes of less worth until it is finally not worth its shop-room, and has to be replaced by a renewal of the article so worn out. Depreciation, although not always apparent, commences the day that an installation has been completed; day by day a certain increment of this fixed capital becomes liquid, and is absorbed by the floating capital when in the form of revenue. Before any profits can be calculated, this liquified increment of fixed capital must be restored out of revenue—that is, by making a specific charge under this head to the cost of production day by day, month by month, or year by year—as it would be highly unfair to allow the fixed capital to appear in the balance sheet at its full cost value each year, and then finally to replace the buildings and machinery, when worn out, at the expense of the profits for that particular year.

The only fair thing to do is to find out what is the average life of the whole of the fixed capital, and divide its cost into as many parts as there are years in its life, and each year take off one of these parts from the value of the investment, considering the amount thus liquified as part of the expense of operating.

The question of depreciation, if fully treated, presents many considerations; these can only be dealt with in a paper of considerable length. What is here said, however, should be sufficient to justify that a charge for depreciation should be included in the oncost expenses, whether these be attached to the shops or to the establishment as a whole.

Machine Charges.—One machine may cost, installed complete, say, two thousand pounds, or more; for its operation it will require a large amount of power, and crane service, and may have to be attended to by one highly skilled craftsman, with now and then some attendance from unattached labour: it is subject to a depreciation charge corresponding in amount to the capital invested therein, and the class to which it belongs. Another may only cost two hundred pounds, or less, and, being nearly automatic in its action, may only require the attention of a low-grade man either during the whole or part of his time: it requires probably very little power to drive it; it needs no auxiliary service, and carries a depreciation charge very different from the larger machine. It is evident that the real cost of work performed on the larger machine, taking rent of capital, shop floor space, services, and all other usual items, into consideration, is much greater than that of the smaller machine.

When no capital charge is made and the depreciation and other shop charges are departmentally averaged up all round, and when these are recovered on the quantities of labour, the charge for facilities per hour of the machinists in each case is the same; that is to say, the less costly machine is too highly weighted, and the more costly too lightly. The question is—Does the difference in weighting in the case of the smaller priced machine properly compensate for the greater share of the shop facilities provided, which the low-grade labour operating it uses up? Should each machine bear the same load of oncost? or should this load differ for each? Which should carry the greater, and which the lesser?

To answer these questions properly, for the two types of machines cited, and for all the machines intermediate between them, special considerations are necessary in each case. Although the cost of one machine may be high, yet, in computing the depreciation, a lower rate of charge may be sufficient, if this machine is of a standard type; in the other it may be much higher, if the machine be classed as special or semi-special. Likely enough, in the case of the special machine, more repairs would be required, as also more outlays for cutting tools and for supervision on the part of some special superintending tool-maker. The more costly tool may be idle for a considerable part of its time; the other may be running to its full capacity, or it may be partly idle. Many other considerations besides these enter into such questions. They cannot be answered in a general way; each case requires special consideration. The running time of each should be kept, as is done with individual workmen. An estimation of power for driving and the rent of the capital invested in each is required. Accounts based on these data, and all ordinary running expenses, are a necessity, if the separate hourly cost of running is demanded.

It can be conceived that there may be occasion for such an accounting. Such occasions are more likely to arise in the future than in the past. In an engineering shop making a variety of heavy products, in the present state of the art of shop-management, such a state of accounting is neither possible nor desirable. In the case where products are much alike, and specialised, it is unnecessary.

When the machine tools in any department do not vary greatly in capacity or value, it serves no useful purpose to make specific individual charges for each, since it is not always possible to assign just the kind of work most suitable to the performance fo each. For most ends it is sufficient to average matters up all round, and trust to the executive officials in charge to do the best they can, as when there is not a sufficiency of work for the heavy tool and there is more light work in the shop than can be overtaken, then the heavy tool may be used for light work. Such adaptations are, however, seldom possible with tools of the special class.

All indirect expenses recoverable directly against organised shop labour may be fairly embraced under one or other of these heads. There is, however, in addition, one item which, strictly speaking, is not directly recoverable on the labour, but upon the material; that is the

(*a*) *Expense of storing materials.*—These include store rents or their equivalent, rates and taxes, light, heat, etc.; all waste or losses arising from obsolete stock, retailing out, pilferings, and omissions to charge outgoings; as also all supplies and services connected with the operating of the stores, whether rough or finished.

The accumulation of bad stock cannot altogether be avoided, but by careful supervision this source of loss may be kept within due bounds. Usually its extent is discovered only after a careful survey has been made of the contents of the various stores, and contrasting the value as derived from the resulting inventory and valuation with the balance at the debit of the stores accounts kept in the commercial books.

The general practice in regard to the treatment of these expenses is to include all stores running expenses under one or other of the heads of shop general charges, and to deal with the shortcomings of the periodical surveys and valuations as a debit to the trading or profit and loss account. There these are not specifically identified; usually they are aggregated with the lump debit for materials. If this trading account shows a handsome profit, this loss on the stores is lost sight of. Should the trading balance be unsatisfactory the proprietor may ask or wish for an explanation more or less detailed; but he seldom is told the whole truth, as those who know most about the stores losses are reluctant to disclose the causes that lead thereto, even when they are in a position to do so.

A more satisfactory method is to open an account for each store, and debit and credit the same according to the following formula:—

Dr. ANY STORE ACCOUNT. Cr.

To stock in hand at beginning of period.	By issues during period.
,, additions during period.	,, stock on hand at end of period.
,, losses on absolute stock.	
,, losses due to shortages.	
,, running expenses for period.	
Dr. balance = deficiency in issue charges to be carried forward to next period.	Cr. balance = excess in issue charges to be carried forward to next period.

These charges are incident to all retail business, such as works stores. The supplies are purchased at wholesale rates, and retailed out in smalls at cost price, plus a percentage on their cost value to cover all expenses, on the authority of a foreman's order, to current shop orders. If the added percentages be too high at the end of any accounting period, there will be a credit balance to be carried forward to next period; then, if the percentage be lowered, this credit balance may change to the debit side, leaving there a balance to be carried forward to next period. In this way these store accounts go on adjusting themselves automatically. The store expenses, when thus treated, will never appear in the detailed oncost accounts.

(*b*) *Materials drawn from outside and delivered direct to the job.*—Losses in this respect can only occur when the goods received do not conform to requirements because of blunderings arising on the part of the originators of the orders given to suppliers, or from changes of design, or through the discovery of hidden defects in the process of finishing, or mistakes on part of the workmen when effecting their transformation from one condition to another. It is not an uncommon practice to return and debit these defective or spoiled materials, particularly those whose defects are due to blunderings, to the stores, and to credit them to the shop orders for which they were originally obtained. In the stores they may remain until the transaction is forgotten—it may be a year or two—and when there is a year of good profits this loss is hidden by making a re-valuation of the stock, and thereafter charging up the whole stores in one lump sum as an asset in the balance sheet.

These defective materials should be transferred at once, not to the stores, but to the spoiled work account.

II.—ONCOSTS RELATING TO EXCHANGES OF VALUES.

These are on a footing different from those charges special to the shops, since they are not so much a function of the *quantities* of labour, as organised for direct production, as they are of the *values* of that labour, and of the *values* of those materials and outservices which it transforms into staple products of the establishment: that is to say they should not be recovered by adding a *load* to the value of labour only, but by a *percentage* added to the shop cost of the work. The diagram, Fig. 1, shows that these expenses apply partly to the shop, and partly to the general establishment. They are sub-divided as follows:—

(*a*) *Shop accountability.* — Takes cognisance of the buying of materials, payment of wages and salaries, and cost accounting. That these have to do with values of every kind entering into the cost of production is apparent, and need not be further enlarged upon. The other duties falling under this head relating to the receiving and checking of materials, and the stores accounting, have already been disposed of. The amount of the expense falling under this head is relatively small in ratio to the whole volume of business, so that although they do not strictly fall within the category of general expenses, yet as their incidence is parallel therewith for all practical purposes they may be dealt with at least as regards their recovery on the products in the same way.

(*b*) *Establishment General Expenses.*—These refer to the conduct of the business generally; they are equally necessary to those transactions special to the shops, as to those others having a direct relationship with the outside public. Apart altogether from the circumstance that these expenses are recovered on the output in a manner different from the shop expenses, there is another important reason for keeping these in an account by themselves. That is to say, the shops may be on a level with those of other competitors as regards their capabilities for production, whilst the commercial efficiency of the establishment may be very different. In the one case, there may be very heavy fees and salaries paid for administration and management, a too frequent indulgence in legal luxuries, abnormal outlays for distributing expenses, very costly show rooms and branch establishments, excessive outlays in special experimenting and investigations. In another case all or part of these may be absent. Cost prices of the former concern, if all these expenses are included, will be much in excess of those of the latter; and, since sale prices are decided more by competition than any other thing, if both concerns are kept in full running, the one may be working at no profit, or even be incurring a loss, whilst the other, prudently managed, will be making a handsome profit. A trained man, knowing the proper ratio of these charges to the shop costs, would, by adopting such a sub-division in the accounts, be able on inspection to point out the weakness in the case of the unprofitable business, and where retrenchment was necessary.

These establishment expenses are, by the diagram, classified under six heads:—

(1) *Selling.*—This operation covers all expense relating to the disposal of the products, and embraces such items as estimating expenses incurred in securing orders for work by means of travellers, agencies, and the like; also all outlays for travelling, getting up and distributing of catalogues and other trade literature, and last, though not least, those bad debts which all firms are obliged at times to face, and those allowances and discounts made either to close up an account which looks bad, or to satisfy a dissatisfied customer.

(2) *Office Expenses.*—The administrative offices may be at the works; often they are establishments apart, located in the business centres of large towns, whereas the works may be either in the manufacturing centre of the same or another town, or in a country district. This expense embraces the usual outlays for rent, rates, taxes, repairs, depreciations, supplies, and operating expenses.

(3) *Insurances.*—These, as distinguished from those like items embraced within the category of shop expenses, relate to stocks of goods and materials of all kinds, wherever situated, and to the fixed property specially attached to the administration department. Whilst all ordinary risks may be insured outside, there are others that cannot be so insured except at a prohibitive premium, which the proprietors usually take upon themselves—namely, the risk of contingent losses arising out of casualties from fire, large business

losses through failure of firms to pay, strikes of workmen, etc. These, in so far as they happen, are part of the working expenses of the business, and require to be provided for before there can be any real profits. In short, they should be a current charge against a fund provided by the business to meet such contingencies.

Reserves for such purposes, in so far as they are necessary, should be charged as an oncost, and given effect to in estimating nett costs. When this is done, the sum to be added for profit when making up a tendering price, although smaller than it should be when it has in view the cover of such contingencies, will be more representative of the true profit.

(4) *General accountability*—as distinguished from shop accounting —relates entirely to the keeping of the commercial books, and to all outlays for salaries and supplies appertaining thereto.

(5) *General management.*—Are outlays special to the general manager's departments, and to the staff specially attached. These should appear as a separate item.

(6) *Control.*—These expenses include the fees paid to the board of directors, and all secretarial expenses, when these are performed outside, as by a firm of solicitors or professional accountants; all audit expenses authorised by the shareholders, and also all law expenses, as the initiative in regard thereto lies with the board.

In considering the sub-divisions of oncost expenses, regard has been had specially to the requirements of a shop making use of a great many processes, adapted specially for heavy work, and turning out a great variety of products in singles, or in twos or threes, at wide intervals of time apart. Generally, however, it holds good that the greater the diversity of the products, and of the processes employed in their production, the greater is the necessity for sub-dividing these expenses, and for a reliable system whereby they can be apportioned, so that each product or separate piece of work may bear its proper share of these expenses—neither more nor less.

Whatever form the scheme of sub-division may take is of minor importance to the inclusion in the oncost charges of all that is embraced under each of the foregoing headings; that is, in other words, every expense whatever not recoverable directly from customers must be recovered indirectly on the work.

ALLOCATION OF ONCOST.

Already it has been pointed out that in this respect the oncosts special to the shop require a treatment different from those expenses common to the establishment as a whole; the one is a function of labour only, the other that of the transactions of the business as a whole:—

1.—Allocation of Shop Expenses.

These expenses are, in practice, generally allocated over the work, by adding a certain percentage to the prime costs, and by one or other of the methods following:—

(*a*) A percentage on the prime cost of the work.
(*b*) A percentage on the values of direct labour only, entering into the prime cost.
(*c*) A percentage computed on the values of direct labour, and a second percentage computed on the values of materials.
(*d*) Averaging the rates paid for direct labour all over the shop, and by increasing this average rate sufficiently to cover the oncost.
(*e*) A constant charge, at so much per hour, on the quantities of direct labour, in addition to the rates actually paid to the workers for such labour.
(*f*) An average charge of so much per man per day.
(*g*) An arbitrary charge depending on the circumstances of each case.

The results obtained by methods (*c*), (*f*), and (*g*), when applied to a common prime cost, can be compared neither with each other nor with those brought out by all or either of the other methods. The results brought out by methods (*a*), (*b*), (*d*), and (*e*), are, however, contrasted as follows :—

Labour—	10	hours at	2d	=	20d
,,	10	,,	4	=	40
,,	10	,,	6	=	60
,,	10	,,	8	=	80
,,	10	,,	10	=	100
,,	50	,,	6	=	300
Materials, say			-	-	200
Prime Cost,	-		-	-	500
Oncost,	-		-	-	300
Gross Cost,	-		-	-	800

In this example, the oncost works out according to:—

method (*a*), is = 60 per cent. on prime cost;
,, (*b*), is = 100 per cent. on direct labour;
,, (*d*), is = 6d per hour oncost, 6d per hour being paid to the worker;
,, (*e*), is = 6d per hour of direct labour.

The nett labour charge—that is, the cost to the employer of each grade of labour as computed by each of these methods—is worked out and shown on Sheet II. Fig. 2.

By comparing the four columns headed "Total Labour—nett value to Employer," it will be observed that the same hourly rates of wages paid to the worker, when loaded with their share of oncost according to each of these four methods, have each an apparently different value to the employer; that these values vary within wide limits, more especially those relating to the lower rates of wages; and that each method, when applied in estimating, would, except in the case where the quantities and prices of different grades of labour bear the same proportion to each other as they do in the hypothetical examples in the table, bring out different results. The question is — Which of these methods of allocating the shop expenses approximates nearest to accuracy in their results, absolute accuracy being unattainable? Should they be distributed in ratio of the materials, or the labour, or both? by quantities or values?

It is clear that the greater the cost of the materials, the less labour requires to be expended upon them; hence, the more the matter of materials enters into the question, the less accurate is the result. When the expenses are distributed on the values of labour, the higher the rate of pay, the greater the load of oncosta given quantity of labour has to carry; whereas the opposite condition is nearer to accuracy, because the lower the quality of the labour, the greater the proportion of the facilities provided for its profitable utilization does that low grade labour consume. The low-paid worker requires the same shop-room, warmth, heat, light, and machine-tool equipment, as the best operator of his class in the shop. He uses more power and tools, and turns out less work, than the highly skilled man. Thus it would appear that, when the *differing* rates of wages are all loaded with the *same* oncost hour factor, the shop value of the labour of the less efficient worker to the employer approximates more closely to that of the high-skilled man.

Thus it is more correct to say that the running expenses of a shop is a function of time, no matter whether the operations are being performed on hardened steel, softer iron, or brass, or whether the machines are being attended to by a boy or by a high-paid craftsman.

Methods of allocation proposed.—These and any other considerations of a like kind, lead to the view that all shop charges should be apportioned on the organised labour directly employed in fabrication by its *quantities*, and not by its *values;* that the *general* shop charges should be allocated between the departments according to the most probable hypothesis, and that the sums thus allocated should be increased by the amount of expenses *special to each department.*

The most convenient unit for measuring the quantities of labour being the hour, if the total amounts of money corresponding to each class of charge, for any given period, be divided by the number of hours of work corresponding thereto, a *factor* is obtained by which to increase the prime cost of every hour, in order to make it bear its most probable share of the cost of the facilities provided for it.

Application of the method proposed.—This may best be explained by the aid of an example, such as that embodied in the following Table:—

TABLE I.

References to Departments. Nos.	Direct Work. Hours.	Total of Departmental Oncost Charges. Pence.	Departmental Hour Factors. Pence.
1	2	3	4
0	100	300	3·00
1	200	500	2·50
2	300	800	2·66
3	400	1200	3·00
General	1000	2000	2·00

The distinguishing numbers of the several departments are those appearing in column 1, the quantities of direct labour are shown in column 2, and the total corresponding oncost charges in column 3. By dividing the departmental charges by the hours of direct work, the hour factors appearing in column 4 are obtained.

Assuming further that the amount of the general shop charges is 2000. Divide this by the total number of hours' work in all the departments, namely by 1000, the result 2d is the *hour factor* corresponding to the general shop oncost.

Assuming still further that the most probable hypothesis for dividing the general shop charges amongst the work is by the quantities of labour expended on the total work performed; and also that the hourly rates of wages paid in any one department are according to the scale given in the top line of the following table:—

TABLE II.

Workmen's rates, pence	10·00	9·50	8·34	7·00
These rates have each to be loaded, for *departmental charges* in Department O, with -	3·00	3·00	3·00	3·00
For *general charges*, with - - -	2·00	2·00	2·00	2·00
Making the total cost of the direct labour to the employer in Department O - -	15·00	14·50	13·34	12·00
In the same way the labour values are found for *Department* 1 to be - -	14·50	14·00	12·84	11·50
Do. 2 ,, - - -	14·66	14·16	13·00	11·66
Do. 3 ,, - -	15·00	14·50	13·34	12·00

In the larger establishments turning out a great variety of work, where it is highly desirable to employ a different oncost factor in computing the cost of work performed in the several departments, these may be worked out as in this Table. When the whole is averaged up all round, the concern would be placing itself at a disadvantage in tendering for work in some of them, and giving the public an advantage in others. It would stand a bad chance in securing a contract in which the bulk of the labour was fitting; it might stand a good chance of securing a contract in which the bulk of the labour was machining.

Consolidation of Oncost Rates.—Where, however, there is no great diversity of product; where the ratios of materials to labour do not vary greatly in each, and where these proportions do vary much from those of the aggregate yearly output, taking one year with another; where selling expenses do not bulk largely in the total; or where the establishment is, in extent, such that the whole of its costs may come within the cognisance of the manager or proprietor, the less is the necessity for differentiation in the rates to be used for recovery of the oncost. Generally the higher the degree of specialisation in the product, the less the necessity for variation or complication in regard to these oncost accounts.

By thus consolidating these charges, and loading the products with oncost at one uniform all round rate, a kind of natural selection is fostered, which in time sifts out, from the work tendered for, that class for which the establishment, as a whole, is most suited; since the orders for these products whereon the average load of oncost is an excessive burden will gradually gravitate to some other shop, whilst those that are undercharged will be placed with the concern tendering on these lines. This may at the outset be an apparent disadvantage for a time, but if the management is alive to the effects of such a policy, and if it devises special means for the more economical production of these special orders, the at one time small general engineering shop is now in a fair way of being transformed into a factory for special products, and where at least components and parts may to some extent be manufactured—not made.

II.—ALLOCATION OF ESTABLISHMENT GENERAL EXPENSES.

These chiefly differ, in regard to their incidence, from the shop charges, inasmuch as the latter are recoverable on the quantities of labour, whereas the establishment charges are a function of the trade values exchanged. Hence it follows that if the shop cost values be taken as a divisor of the establishment charges, a *per centage factor* is obtained by which the shop costs should be increased in order to arrive at the gross cost.

RECOVERY OF ONCOSTS.

For ordinary commercial business purposes it is of little importance whether these expenses are apportioned over the individual objects of work performed in the shops, or whether dealt with as a single amount, so long as they are paid for out of profit.

These expenses are very variable in regard to their occurrence, they change from year to year, from month to month, and even from day to day, but it is usually supposed that an expenditure of direct labour, more or less equal as regards quantity, in the same class of work, under the same management, when working with the same equipment, that the oncost factors will not vary greatly from year to year. They are, however, to a large extent, fixed and independent of the output; those that bear the closest relation, say, a direct ratio to the hours of work, are the departmental charges; the shop charges are less affected, and the establishment general charges least of all.

In few businesses can such regularity of employment be depended on; there are years of good trade and years of poor trade; in bad times there are long holiday terms when no work is doing, but still the establishment expenses and a good many shop expenses are going on all the time; in good times the men work less hours than they would do in bad times, and partly to make up for this the shop often incurs much extra overtime expenses. So great are these variations that the overhead difference between the oncost factors ruling in a good year and a bad year is as much as 50 per cent. computed on the higher rate, or about equal to one-third on the direct wages paid. With a good system of shop accounting it is a comparatively easy matte to ascertain the amount of the current oncosts from month to month, or even from day to day, and thereafter to allocate the same over the work performed in the like periods; *but the application of any oncost factors so derived to estimating or comparison purposes would be misleading.*

Likewise the practice generally prevailing, in regard to the making up of the trading and profit and loss accounts in the commercial books, of debiting the former with the shop expenses and including in the latter all establishment general expenses, influences the profits and losses to the extent of these fluctuations; and permits only of an arbitrary adjustment by means of carrying to some kind of reserve account in a good year a proportion of these unduly swelled profits, and it may be by withdrawing therefrom a portion of them in a bad year.

The intelligent manager requires some more reliable guide than these lump sums for administering the affairs of his business; he requires detailed accounts showing the incidence of these ever varying charges, the maxima and minima of which only appear at wide intervals of time apart, whereas on the other hand the prices which he obtains for the work are fixed by contracts made often considerably in advance of the time of their execution These details to the manager are as notes to music which fix the vibrations of the voice that seeks expression in song; administration without them is as music without notes—by ear.

These oncost expenses, in their incidence, present many of the phenomena of insurance, so much so that their variations, in so far as they are found to exist, may be attributed to causes, the effect of which in future cases may be closely approached.

Recoveries in Cumulo.—These requirements of the manager have to be anticipated by the commercial accounts. There the indirect expenses should be cared for by two impersonal accounts—one of which represents the shop charges, the other the establishment general expenses. About each of these there are certain features to be watched and cared for, which cannot very well be attended to in an account consolidating the whole. First there is to be considered the growth of the account, period by period, and the variations that may be found therein; and second, their effects when applied in the future, and the recovering of the charges on the products, one by one, as they are completed. Each account may with advantage be sub-divided; these sub-divisions may be named as respectively—

(*a*) The compensating account.
(*b*) The recoveries account.

Both are necessary to a full comprehension of the incidence of the charges.

(*a*) *Shop Charges—Compensating Account.*—It is maintained by debiting thereto, period by period, as and when incurred, the aggregates of the shop charges; it is cleared by crediting an amount corresponding to the number of hours expended on all direct labour during the same periods on Plant and Work reckoned at the predetermined hourly rate of charge, *i.e.*, the hour factor.

If this hour factor correctly represents the variations during a representative cycle of years, in these years of good trade, this account should show a credit balance, and in bad years a debit balance.

These operations may be expressed in formulæ as follows :—

Dr. ANY COMPENSATING ACCOUNT. CR.

To balance at beginning of period. ,, amount of actual shop charges for the period.	By the amount equal to hours of direct labour × working factor.
Dr. balance = to deficit due to prolonged bad trade.	Cr. balance = to surplus in periods of good trade.

(*b*) *Shop Charges—Recoveries Account.*—This account is in turn maintained by the credits of recoveries to the compensating account, and cleared by the charges only against *completed* Plant and Work, as made through the nett cost day-book hereafter referred to.

In every going concern there is always a certain amount of work in progress, and as the shop charges thereon cannot be recovered till this work is completed, it is evident that this account should always have a debit-balance *equal in amount to the shop charges corresponding to the work and plant in progress.*

Since these recoveries are a function of the time units expended on direct labour, this account should be kept in terms both of quantities of labour and their corresponding values, as shown in the account formula, Sheet II., Fig. 3.

Establishment General Charges.—These, like the shop charges, are also subject to fluctuations. Although the ordinary items of expense are comparatively constant, whatever be the variations in the output, yet there may be abnormal expenses such as lawsuits, heavy bad-debts and depreciations due to revaluations, and other exceptional items, all of which have to be paid for in one way or another.

Establishment Charges—Compensating and Recovery Accounts.—For the reasons now given, as well as for those stated in reference to shop charges, these establishment charges should be cared for and recovered on the *shop cost values* of the output, by means of a percentage factor in the manner similar to that suggested for the recovery of the shop charges, and the balances of these accounts dealt with in the same way, as shown in Sheet II., Fig. 4.

Increases and Decreases of Capital Account.—The balances of both compensating and recoveries accounts, whether debit or credit, when a complete balance of the accounts is required, may, if the shop appliances are what they should be, fall to be carried to this account in the commercial books, when it is desired that the true condition of the business should be shown. When there is a surplus in both accounts, it should be allowed to remain therein as an equaliser of profits in future years of bad trade. Prudent business men are never likely to treat as an asset any debit balance that may arise in the compensating accounts; these should be cleared off as they arise by credits derived from profit and loss.

Nett Cost Account.—Its function is to determine the nett cost of the work when completed. It is debited with the prime cost of all such Plant and Work, and also with the amounts of the shop and establishment charges corresponding thereto; these collectively are the aggregate of the detailed nett cost. The credit side sub-divides this aggregate into products, finished stores, and plant; it hands these over at cost to the stock, stores, and investment accounts respectively.

This account at the end of each working period should always be in balance.

Recoveries in Detail.—Coming now to consider this aspect of the subject, the question is how should the proprietor of the business be recouped for the widely fluctuating oncost outlays in a manner that will be equally fair to his customer as to himself. How are the recouping factors (*a*) for the shop charges, and (*b*) for the establishment general charges to be ascertained, and how applied?

(*a*) *The shop hour-factor.*—From what has been said, it may be gathered that this factor should not be computed on the average working results of any one year; it should be the *cumulative average* over a series of past years representative of the trade cycles, but corrected as may appear necessary from time to time for modifications in improved shop efficiency, machinery, and such like. A considerable number of years must necessarily elapse before reliable average factors can be found; but these, once ascertained, should not be changed, as regards their use, by the estimating clerks, without very good reasons. With such a factor always in sight, any modifications in the results of estimates, that may be necessary from the condition of the order book or otherwise, can easily be given effect to by the manager when fixing the final tendering price, if he is well versed in his business.

These factors are determined automatically by keeping suitable registers of the outlays, and therefrom computing both the periodical and cumulative rates.

(*b*) *The establishment charges percentage factor.*—The methods for determining this factor are similar to those made use of for the ascertainment of the shop hour-factor. Space limitations here prevent a full explanation of these methods being given. To treat them and the other allied subjects is the function of comparative accounting, which may well form the subject of a separate paper.

Nett costs.—To ascertain the most probable cost of every object of production, or separate piece of work performed, it is necessary to add to the prime costs of each its proper share of these oncosts. This is perhaps best done—and at the same time the totals of the amounts so recovered ascertained—by making use of some form of day-book, where each transaction is entered in chronological order, such as in the example about to be given.

For the sake of simplicity in illustration, in this example all the shop charges—departmental and general—are embraced in one common hour factor; but, where it is necessary or desirable to consider the oncosts for each department separately, the recovery operations, whether performed departmentally or collectively, are the same in either case.

Nett cost day-book.—The form made use of is shown on Sheet III. Fig. 5. All finished products, components, or parts—each class being entered in a separate list, whether they are to be transferred to the finished stores for use as occasion requires, or for sale—which have been reported on the shop order cards as "complete," are posted direct from the prime cost day-book into this nett cost day-book. There designations are entered in columns 1 to 4, the production order numbers observing serial order as near as circumstances will permit.

(*a*) *Recovery of shop charges.*—The time units, or hours of direct work, on each object, are entered in column 6, and the shop charges computed thereon in terms of the working hour factor are entered in column 7. The total amounts so recovered bring the vertical summation of that column.

(*b*) *Shop Costs.*—The prime cost summaries for labour, materials delivered direct, rough and finished stores and outservices, are next transferred from the prime cost day-book into columns 8 to 12 of this nett cost day-book. These totals combined with that of the shop charges is the shop cost total as entered in column 13.

(*c*) *Recovery of Establishment Charges.*—The amount of these charges for each item computed thereon in terms of the predetermined average per centage factor is next entered in column 14.

(*d*) *Gross Cost.*—This is the amount obtained by adding the establishment charges to the shop cost, *i.e.*, the sum of the amounts in columns 13 and 14; it is entered in column 15.

(*e*) *Plant and Tools.*—Whatever expenses have entered into the gross cost under these heads may be ascertained by reference to the prime costs of the shop and job orders special thereto. Then whatever the value these may have for future use to the business, is put down in column 16.

(*f*) *Nett Cost.*—Deduct the estimated values of the plant and tools from the gross cost; what remains is the nett cost as entered in column 17.

(*g*) *Proof.*—If the accounting has been correctly performed the vertical totals of columns 8 to 12 inclusive, taken together, should agree with the corresponding totals of the detailed shop orders representing the products here dealt with. The total of column 7 should agree with the total shop charges debited to the fabrication account in the commercial books, and the totals of column 14 with that of the establishment charges, likewise so debited.

(*h*) *Nett Cost Account.*—The aggregate cost of both plant and work, is required to square this ledger collective account. They are respectively obtained from summations of columns 16 and 17 of the nett cost day-book. These are credited to nett cost account by means of an entry in the general journal. By the same means, and at the same time, the completed work is debited at cost to the stock accounts, and the tools and plant to their respective investment accounts.

Nett cost, oncosts, and prime costs, should always be shown separately. Nowhere, except in the nett cost day book—or, as it may very properly be called, the

Cost Register—has any provision been made for recording separately these various and progressive summaries of costs; but in all forms used, or to be used, special columns should be set apart for each class of expense, and for the number of hours expended on prime cost labour. Comparisons of the cost of work, wherein prime costs, oncosts, and plant are slumped into one grand total, for other than the most general purposes, are of little practical utility. It is, indeed, dangerous to rely on the costs of manufacturing operations compiled by any process fusing all these classes of expenditure into one total. For estimating purposes, for regulating the shop efficiency, and for comparing from time to time, and period by period, the relative economies and efficiencies of shop administration, it is essential that each of these classes of expense should be exhibited separately, in order that the undiluted facts may be prominently presented and reflected in the accounts, and so as to render possible correct comparisons of all costs, even when performed at wide intervals of time.

For the general purposes of the estimating department, the nett costs based upon the average working oncost factors are sufficient. But when any departure has to be made therefrom, reference to the manager, or other competent authority, is necessary; and, since this authority should always have present to his memory the current oncost factors and the condition of the customers' order book, he should be able on the instant to deal with any circumstances that may have arisen.

The main object of these and all cost accounts is that they should prove a sure and effective guide in showing how, when, and where to meet competition, and to enable intelligent action to be taken to that end. It should always be borne in mind that the best system of accounts is only a means to an end. To make use of them, there must always be behind them the intelligence to perceive the meaning of the collected and classified data, as also the capacity to plan improved methods, and the energy to carry them out.

Discussion.

Mr **William M'Whirter** (Member) observed that Mr Cowan said it was customary to charge overtime allowances to the shop orders on which the men were actually working during these over hours, although the other charges for running expenses during the same hours were charged to oncost account. Later, Mr Cowan went on to say, "In the case of, say, a breakdown of a customer's machinery, when the cost of making the same good is of minor importance to the loss sustained by the customer through his factory being thrown idle, there is usually an understanding between parties that an extra charge should be made for working overtime." He thought the usual practice, so far as his experience went, or so far as he had heard, was that when such things occurred it was right and proper that the overtime should be wholly charged to the job; at least he had always done so, and he had always considered that if he had caused anyone to work overtime on his behalf he would think it only fair that these charges should be debited against the job. He thought it would be rather unfair that it should be spread over other orders which had nothing at all to do with it. Of course, as Mr Cowan said further on, "in many instances overtime was worked through mistakes arising in estimating the time necessary for work." That being so, it might be right and proper that it should be distributed further than the job upon which the overtime had been worked, but he was afraid it was not usual in such cases.

Mr E. P. **Hetherington** (Member) said in a case where 100 hours overtime was worked the men were paid for 125 hours.

Mr E. P. Hetherington.

He would like to ask Mr Cowan who paid this extra 25 hours (premium time)? Was it charged to the oncost or general charges of the year by keeping a separate account of it, or did the proprietors of the establishment pay it and let it find its adjustment somehow in getting out the yearly balance sheet? How did Mr Cowan allow for it when making out estimates for work? Supposing he was estimating for a job and based his price on the cost of a similar job executed when the establishment was very busy, and when perhaps a lot of overtime was being booked to various jobs, he would be covered in his estimate; but if he took the job based on the cost of similar work executed in slack times and no overtime booked against it, and did it in busy times and paid overtime premium time not actually put on the job in the form of work, he would probably come out on the wrong side. If performed by day work the customer would undoubtedly be charged the whole time booked on the job including premium time, but time, as explained, not actually put on the job as work; if by contract, How was this time accounted for?

Mr Cowan, in reply, said he agreed with Mr M'Whirter that it was customary and right to charge any extra expenditure on oncost to a customer in the case of a break-down, when there was an understanding to that effect. He also agreed with Mr M'Whirter in saying that it was not customary to charge overtime premiums to oncost. This was the practice to which the paper took exception. The real reason why overtime was worked, in the majority of cases, was that the facilities provided by the shop were insufficient to cope with the work undertaken to be put out within a given time when only the usual shop hours were worked. If a given quantity of work was undertaken to be performed within a given time, and if the facilities for its performance within that time were not sufficient, the shop was bound to provide what facilities it was short of, and the simplest way seemed to be that of running the shop an extra amount of time. It was a matter of accident what jobs were worked on

SHEET I.

Administration,	extras, …	rates,	
	tainence,	Telegraph, telephone, postages, etc., Repairs to furniture, Repairs to premises, Depreciations,	
	3. Insurances,	Office buildings ,, furniture Stocks and stores, Work in progress, Not insurable outside,	Reserves or surpluses.
	4. General accountability,	Share and other capital, General accounting,	Profits and Losses. Surpluses and Deficits.
	5. General management,	Initiation of executive acts,	General Manager. His personal staff.
	6. Control,	Board, Secretary, Legal expenses	Staff specially attached.

Mr Cowan.

during this extra time, so that the extra cost of running extra time should not be charged directly to the jobs on which it had accidentally been expended—this cost, like any other facility which had been provided to make organised labour more profitable, should be spread over the entire output. If this overtime premium were charged to the jobs on which it had been directly expended, the value of any comparison of the cost of this job with a like job done in ordinary shop hours would be nil, or nearly so. Mr Hetherington referred to a case where 100 hours overtime was worked, and the men were paid for 125 hours, and asked who paid this extra 25 hours. It was certainly not the customer who paid, as the price he had to pay was usually fixed by contract beforehand. In the absence of any special circumstance, he thought the cost of these 25 extra hours should form an item in the shop general charge, or the shop departmental charge, according as the incidence might fall. Mr Hetherington asked how this would be allowed for in making out estimates. In this connection he should say that, if it was foreseen, when estimating for the job, that overtime would require to be worked, this premium would, in making up the estimates, be dealt with as a direct labour charge; it would also be dealt with in the same way when making up the cost of the job. Had overtime not been contemplated when estimating for this special work, but as a matter of fact such was found necessary when the work fell to be performed, then it was clear that a mistake had arisen when estimating, and therefore the shop had to pay for this mistake by charging the cost of it to shop expenses.

The PRESIDENT said they were indebted to Mr Cowan once more for a very valuable and instructive paper on a subject which was of the very utmost importance to all connected with engineering and shipbuilding. The appreciation of Mr Cowan's efforts on their behalf had already been shown that evening in the award which they had made him, and he had very much pleasure on behalf of the Institution in proposing a very hearty vote of thanks to him.

The vote was accorded by acclamation.

CONVERSAZIONE AND EXHIBITION.

A Conversazione was held in the St. Andrew's Halls, Glasgow, on Friday, 2nd November, 1900, when the members and their friends, together numbering about 1000, were received by the President and Mrs Caird. The meeting was thoroughly representative of all the branches of engineering science and industry embraced by the Institution.

The Grand Hall was arranged for a promenade concert and dancing; and a cinematograph display took place at intervals during the concert and between each dance. Refreshments were provided in the Kent Hall throughout the evening, while the Berkeley Hall adjoining was devoted to an exhibition of models and scientific apparatus, with accompanying demonstrations. Although the majority of exhibits were associated with shipbuilding and marine engineering, a large number of the most interesting related to hydraulic, electrical, gas, and locomotive engineering.

ARREARS OF SUBSCRIPTIONS.

At the Second General Meeting, held on 20th November, 1900, the President said that at the last meeting, when the Treasurer's Statement was before the Institution, he ought to have asked if any of the Members had any remarks to make on the accounts. He had taken it for granted that they were in order, and had looked upon the presentation as a purely formal matter, but he had since found that some gentlemen would like to make some remarks upon the accounts, and, with their permission, he would now call upon Mr F. J. Rowan to do so.

Mr F. J. Rowan said the subject that he wished to call attention to in the statement of accounts was one of some importance to the Institution—the subject of arrears. There were two facts on the surface of the statement, namely the amount of arrears, which appeared in the accounts standing at £292, and the valuation of that asset at only £50. These were facts which, he ventured to think, did not reflect much credit upon the Institution or upon the Members who were in arrears. It was perfectly plain that although a very low estimate had been put upon the arrears, it was not wise to increase it, because in the abstract of accounts it appeared that even that same estimate had not often been reached. The amount of subscriptions in arrear recovered during the past year was only £39, and, although in the previous year £65 10s was recovered, that only brought out an average of £52 5s for these two years. There were other facts which did not appear so plainly, and these could only be discovered by going through the books, and he might say that both Mr Napier and himself were considerably surprised at what the accounts revealed. They would notice that there were 74 Members in arrears for last year, and from the previous years there were 26 Members, with the amount due by them standing at £91. That at once showed

Mr F. J. Rowan.

that some subscriptions were more than one year in arrears because 26 Members would only amount to £39. The same applied also to both Associates and Graduates who were in arrears; in fact, some arrears extended over three years, and even more. Some had not even paid entry money or any subscription, and they yet appeared on the Roll as Members entitled to certain privileges, which probably they exercised.

Mr JAMES WEIR thought that Mr Rowan's remarks were not in order.

The PRESIDENT observed that Mr Rowan was perfectly in order in wishing to make this statement.

Mr ROWAN, continuing, suggested that some means should be arrived at whereby this state of matters would be prevented in the future, not only on account of the appearance of such a statement on the accounts, but also because of the increased labour which was involved in dealing with the matter in keeping the books. When he told them that it took Mr Napier and himself four solid hours to go through an abstract of the books, they could imagine that dealing with all these back entries must throw a considerable amount of unnecessary labour on those who had charge of the books; and he wished to call attention to the fact to urge that no such state of things should be possible beyond the period of two years. If a member was in arrears for two years, his name—as in other Societies of which he knew several—should be removed either by the Council or by a vote of the general meeting of the Institution. (Applause.) It seemed to him unnecessary and useless to continue names on the Roll of the Institution for a longer period when there was no result except to throw additional labour on the book-keeper. He found that in the bye-laws of the Institution there was power at any time, after one year's arrears, to put to the meeting the question of the removal of the name of any Member from the Roll on this particular question of arrears. It was not a very agreeable thing to do, and they could quite understand how it had not been put into practice, but he thought it was quite plain that some means ought to be taken to introduce a better state of matters.

The President.

The President explained that the Council had had the question of arrears before them on several occasions, and the decision to which they had come was that it was not advisable to adopt harsh measures in dealing with gentlemen in arrears. One view that they took of it was that arrears were always an asset, and every now and then it happened that some gentleman paid up, which was an agreeable little surprise to the Treasurer. Besides that, he did not quite agree with Mr Rowan that it added much labour to the book-keeping; and, unless there seemed to be a very strong objection, he thought it would be better to leave matters in the hands of the Council. He could quite understand how, acting as he had done as an auditor of the accounts, Mr Rowan had been struck by the increase in the arrears, and he thought they ought to thank him for drawing their attention to the matter.

THE "JAMES WATT" ANNIVERSARY DINNER.

The Annual "James Watt" Dinner was held in the Windsor Hotel, St. Vincent Street, Glasgow, on Saturday evening, 19th January, 1901. The company numbered upwards of 280, including members of the Institution and distinguished guests. In the absence of the President, Mr Robert Caird, LL.D., who was indisposed, the chair was occupied by Professor Barr, D.Sc., Vice-President, and the croupiers were Mr Archibald Denny, F.R.S.E., and Mr William Foulis, Vice-Presidents, and Mr Andrew S. Biggart. The Chairman was supported by—The Hon. Lord Provost Samuel Chisholm; Sir William Arrol, LL.D., M.P.; Col. R. Rutherford; Bailie James M. Thomson; Provost Andrew Brown; Mr G. Handyside Dick, President, Chamber of Commerce; Mr Henry Murray, Messrs Murdoch & Murray, Port-Glasgow; Mr James Fleming, Chairman of Governors, Glasgow School of Art; Mr James Mollison, Lloyd's Register; Mr Anderson Rodger, Messrs A. Rodger & Co., Port-Glasgow; Mr James W. Blair; Mr J. Imbrie Fraser, President, Graduates' Section of Institution of Engineers and Shipbuilders in Scotland; Sir David Richmond; the Very Rev. Principal Story, D.D.; Mr James Macfarlane, Deacon-Convener of the Trades House; Mr G. M'L. Blair, Messrs P. & W. M'Lellan; Rev. R. H. Fisher, B.D.; Fleet-Engineer Rees, R.N.; Mr John Ward, Messrs William Denny & Bros., Dumbarton; Mr George Beard, President, West of Scotland Iron and Steel Institute; Mr Thomas Kennedy, Messrs Glenfield & Kennedy, Kilmarnock; Mr Matthew Paul, Messrs M. Paul & Co., Dumbarton; Mr John Thom; Mr James Nicol, City Chamberlain; Mr Robert Laidlaw, Messrs R. Laidlaw & Sons.

After dinner, the Chairman proposed the toast of "The Queen." He said it was customary to do so without words, but that day they had received disquieting news. It behoved them, in these circumstances, to honour the toast in silence. He was sure that they would join with Her Majesty's subjects in every part of the world, and with every one who recognised the dignity of a noble and stainless life lived in the fierce light that beat upon a throne—they would join in the prayer, "God Save the Queen."

The company received the toast in silence, and remained standing while the orchestra, in subdued tones, played the National Anthem.

Sir **David Richmond** submitted the toast of "The Imperial Forces." He said that at no time in the history of this country, at all events within the lives of most of them present, had the actions of the Imperial forces been more carefully watched than during the past twelve months. He thought he spoke the mind of the company when he said that these forces, under the most difficult circumstances, had done nobly and well. After a reference to the comprehensive character of the toast, he said it so happened that recently he had had an opportunity of seeing the Imperial forces of the Queen at their work. He desired to say how pleasing it was to see how pluckily and how well these men buckled to the work that was set before them. He had seen these soldiers of the Queen, many of them reared in the lap of luxury at home, who had had every comfort that money and position and love could bring, living out on the veldt with nothing but a biscuit and a half per day, a piece of bully beef, and a drink of water—and yet quite happy. He had seen these men responding to the bugle call that roused them off the veldt, with the blue canopy of heaven above them for a tent, roll up their blanket, making it like a horse's collar, putting it over their shoulder, and marching off, happy and fit to do anything, and willing to try to do everything they could. It would be quite useless for him to compare the work of any particular branch of the service, because every branch was anxious to do what in them lay to preserve the honour and glory of their country.

Col. Rutherford.

Colonel Rutherford, who responded for the land forces, thanked the gathering heartily for the cordial way in which they had drunk the health of the Imperial Forces of the Queen. Glasgow held a peculiar position in respect that it was intimately connected with both the sea and the land forces of the Empire. Many a brave warship started on its first voyage down the river Clyde, and it must be with feelings of intense pride and pleasure that they followed the movements of those ships through the world of waters. With regard to the land forces, Glasgow supplied an enormous number of men for the service of the Empire. There was hardly a department, corps, or branch of the service in which Glasgow was not well represented. He went on to speak of the loyal and splendid action of a great many people in the country, who, at a great sacrifice of time, trouble, and expense, had kept open the billets of those who had gone to the war. Many a troubled mind on the veldt must have felt satisfied and at ease when they thought that, after the toils and troubles and dangers of the campaign, there was the certainty that when they came back it would be to their former billets. These men would return better men for the experience they had undergone, while the employers would find they would have under them many a grateful heart.

Fleet-Engineer J. S. Rees, R.N., of H.M.S. "Benbow," returned thanks on behalf of the Navy. He said that when the trouble in South Africa and China broke out nobody thought the handy man would be called in to help, but when he was called in, he thought they would agree that he was not found wanting. He had noticed that a Mr Allen had been telling the American people that the British battleships were unseaworthy. Of course he did not agree with that view, and he was pleased to see that the chief constructor and the engineer-in-chief of the American Navy had given it as their opinion that the British ships were the best that could be built. Mr Rees went on to speak of the necessity of more men for the Navy. It was no use gainsaying the fact that they had been building, building, building, and had not kept pace as regards the number of men in the naval service. He quoted from a letter from the "Terrible" in China, with respect to the big gun practice of that ship's crew. In the practice with the 9·2 inch guns six of them got 100 per cent. of direct hits, while the average for the 9·2 inch and 6-inch guns was just over 80 per cent. Considering that it was a very small target that was used, he thought there was much to be thankful for in these results.

The CHAIRMAN, in proposing "Our Guests," said their toasts were few, but that only seemed to accentuate the importance of those that the committee had decided they should be asked to honour. The toasts of the Queen and of the Imperial forces were usually referred to as formal, but they were to all of them much more than that. In honouring these toasts they were on the one hand giving expression to the appreciation of that tender and scarcely felt rule which had so sweetened the lot of all the willing and loyal subjects of the Queen, and had done so much to mitigate the sufferings of those who naturally belonged to the Empire but who refused to be gently led. And on the other hand, they were expressing their confidence in what they believed to be the irresistible power that had made and would maintain the Empire to which they were all proud to belong. It fell to him now to offer for their acceptance a toast which if it did not appeal to them from considerations of loyalty and patriotism, or from interests of national and individual security, must command their support from the scarcely less compelling considerations of the unwritten laws of hospitality. But the toast was much more than that. It was they who were honoured by the presence among them of so many whom they delighted to honour. They were met on a great anniversary occasion. One hundred and sixty-five years had passed since James Watt was born, but his name was still pre-eminent among the great pathbreakers in the fields of the arts of peace, and his fame was still and ever would be unsullied. They recognised in the presence of their distinguished guests a fitting tribute to the memory of one who

The Chairman.

needed no monument other than the enduring and ever-growing one he erected in his life's work. He would ever hold an indisputable position as the pioneer of the great movement which, during the century that had just closed, had given men so large a command over the forces and material resources of nature. And they must not forget that it was he who, with that rare foresight and insight which characterised the truly scientific mind, first formulated for their guidance many of those eternal principles which they as engineers had not yet fully reaped the benefit of, and which perhaps they scarcely realised the potency of to-day. It was fitting that one to whom the world owed so great a debt should have the homage of men of all vocations, who all alike shared the benefits which his labours had brought to mankind. But they also saw in the presence of their guests, a recognition by men of widely varied interests and vocations. They welcomed their guests among them, and thanked them for their presence, which gave such distinction to their meeting. He was pleased to see present representatives of the Church, to whom they owed no grudge for their usurpation of the title of belonging to the oldest of all professions. They had also with them representatives of the naval and military services of the country, to whom they owed so much of that security which came from peace, while he was sure these services recognised how much they owed to engineering for the materials at their disposal and the tools with which they worked. Professor Barr also alluded, in terms of satisfaction, to the presence of the President of the Chamber of Commerce, and to that of the Deacon Convener of the Trades House. He spoke also of representatives of kindred branches of the service, such as their honoured friend Mr Beard, of the Iron and Steel Industry. Lastly, he referred to the representatives of the municipality of Glasgow, which conducted the greatest engineering enterprises of the West of Scotland. Engineers, or their forefathers, had striven after the attainment of perpetual motion, and their brethren of the chemical profession, or their ancestors, had long striven for the philosopher's stone, but Lord

Provost Chisholm had gone one better in respect that he seemed to have discovered the elixir of life. What the secret of it was he had never been able to learn from the Lord Provost further than that it had no connection whatever with that subtle fluid referred to by the somewhat analogous term of "aqua vitæ."

Lord Provost CHISHOLM, in replying, acknowledged the cordiality with which the toast had been pledged. They, their invited guests, had such a thorough and absolute appreciation alike of the services which engineers had rendered, and to the position which they had won in the industrial and commercial world—and, looking to the services which they had rendered as shipbuilders especially, he might also say to the political world—that they quite realised how greatly they had honoured their guests in permitting them to sit at that hospitable board. The chairman had, in the concluding portion of his remarks, referred to the Corporation engineering works. He wondered if they had thought how very numerous those engineering works were. When they rose in the morning, they dressed by the light which their gas engineer gave them, or by the electric light supplied by their electric engineer. They took their bath—at least he hoped they did—in water brought in by Mr Gale, their water engineer. They rode down to business on a Corporation car, or if they walked they then saw those streets the cleanliness of which was the subject of universal—he would not say admiration—but of universal observation. When they reached their office and were startled by the ringing of a little bell, they ran to the telephone and found someone ringing whom they did not want, and a moment afterwards they wanted to ring up somebody they could not get, and they were only saved from yielding to the temptation to use bad words by remembering that the Corporation would soon be there, and everything would then be right. The Corporation assisted them from morning to night, and from the beginning of the year to the end of it. When they had gone to business, nurse took the child to walk in a Corporation park, and to listen to the music of a Corporation band. When illness overtook the little one he was sent to a Corporation hospital and killed or cured by a Corporation medical man. He was, however, forgetting that he was not the only guest, and that he was standing there in a representative capacity. Truth to tell, he scarcely knew among the guests who were engineers and who were not. He could only be perfectly certain of two who were not engineers, and they were—if he would pardon the collocation—Principal Story and himself. And yet, when he thought about it, it seemed to him that they too might put in a claim to be engineers. Principal Story had a very difficult engineering job on hand just now; he had a scheme which he wanted to engineer to success, namely, the better equipment of his university, and he would need all the engineering skill he had to conduct it to the success which it deserved, and which he hoped it would have. He could assure them, it required no little engineering to sit in the chair of a company consisting of 77 men with 77 minds. He concluded by returning thanks on behalf of the guests.

This completed the toast list. The remainder of the evening was pleasantly spent as a smoking concert.

ADDRESS TO HIS MAJESTY THE KING.

At the Fifth General Meeting, which was held in the Large Hall of the Young Men's Christian Association, on 19th February, 1901, Professor BARR said that the President was present, but he did not feel his voice in a condition to allow of him speaking in so large a hall as that in which they were met that evening. The President had therefore asked him to conduct the business, and he would ask the Secretary to read the Minutes of the last two meetings.

The Minutes having been read and adopted, the CHAIRMAN remarked, that after the adjournment of the last meeting, under such melancholy circumstances, the Council had thought it proper without waiting to convene and hold a special meeting of the Institution, to prepare an address to His Majesty the King on his accession to the throne. If there was no expression of dissent in the meeting he would understand that the members approved of the action of the Council, and would ask the Secretary to read the address that had been prepared.

The Secretary read the following address while the audience stood :—

TO THE KING'S MOST EXCELLENT MAJESTY.

May it please your Majesty,

We, the President and Council of the Institution of Engineers and Shipbuilders in Scotland, beg most humbly to express our sincere condolence with your Majesty in the affliction which the lamented death of our beloved Sovereign Queen Victoria, of blessed memory, has brought upon your Majesty, your Royal House, the nation, and whole civilized world.

The rare example of her stainless life, a life unsparingly devoted to the amelioration of the condition of the various peoples throughout her vast Empire will ever be cherished by us with the deepest affection and regard.

We desire at the same time to record our devoted and unfailing loyalty to your Majesty's Throne and Person, and our confidence that the arts of peace, which in this country have owed so much of their prosperity to the wise initiative and guidance of your Majesty's father, the late Prince Consort, will receive fresh stimulus and encouragement at your Majesty's hands during a reign which we earnestly pray may be a long, a glorious, and a happy one.

Signed and sealed by appointment of the Council of the Institution of Engineers and Shipbuilders in Scotland, on this, the twelfth day of February, 1901.

R. CAIRD, *President.*
EDWARD H. PARKER, *Secretary.*

MINUTES OF PROCEEDINGS.

FORTY-FOURTH SESSION.

The First General Meeting was held in the Hall of the Institution, 207 Bath Street, on Tuesday, 23rd October, 1900, at 8 P.M.

Mr **Robert Caird**, LL.D., F.R.S.E., President, occupied the chair.

The Minutes of the Annual General Meeting, held on 24th April, 1900, were read, confirmed, and signed by the President.

The Annual Report of the Council and Treasurer's Statement were held as read.

The President delivered his Introductory Address. On the motion of Dr **John Inglis**, Past President, a vote of thanks was awarded the President for his address.

The Awards made at the Annual General Meeting of 24th April, 1900, were presented as follows, viz.:—

THE INSTITUTION GOLD MEDAL

To Professor **Archibald Barr**, D.Sc., for his paper on "Comparisons of Similar Structures and Machines."

PREMIUM OF BOOKS.

To Mr C. A. **Matthey**, for his paper on "The Mechanics of the Centrifugal Machine"; to Mr **James Weir**, for his paper on "The Problem of Combustion in Water-Tube Boilers and a Means of its Solution" (read at Sheffield); to **Professor John Oliver Arnold**, for his lecture on "The Internal Architecture of Metals" (delivered at Sheffield).

Thereafter a paper by Dr J. A. **Purves**, F.R.S.E., on "A New Gas Producer," was read. A paper by Mr J. D. M'Arthur, on "Marine Engine Shafting," was held as read.

The President announced that the following candidates had been elected, viz.:—

AS MEMBERS.

COATS, ALLAN, Jun., Engineering Draughtsman, Hayfield, Paisley.
GRAHAM, JOHN, Shipbuilder, 25 Broomhill terrace, Partick.
M'LAURIN, DUNCAN, Mechanical Engineer, Cartside, Milliken park, Renfrewshire.
SHEARER, JOHN, Shipbuilder, 13 Crown terrace, Dowanhill, Glasgow.
STEVEN, JAMES, Brassfounder, Eastvale place, Kelvinhaugh, Glasgow.
WILSON, ALEXANDER HALL, B.Sc., Shipbuilder and Engineer, Messrs. Hall, Russell & Co., Aberdeen.

AS AN ASSOCIATE.

BURNS, *Hon.* JAMES C., Shipowner, 30 Jamaica street, Glasgow.

AS MEMBERS FROM GRADUATES' SECTION.

RICHMOND, JAMES, Tube Maker, 24 Sutherland terrace, Hillhead, Glasgow.
SADLER, HERBERT C., Professor of Naval Architecture, University of Michigan, Ann Arbor, Mich., U.S.A.

AS GRADUATES.

ALEXANDER, ROBERT, Engineering Draughtsman, 76 Kenmure street, Pollokshields, Glasgow.
KINGHORN, DAVID RICHARD, Apprentice Engineer, c/o Mrs Banks, 57 St. Vincent crescent, Glasgow.
LESLIE, ALFRED, Engineer, 148 Hill street, Garnethill, Glasgow.
M'CULLOCH, JOHN, Engineer, 2 Willowbank crescent, Glasgow.
M'KEAN, JOHN G., Engineering Draughtsman, 235 Bath street, Glasgow.
MACLAREN, JAMES ERNEST, Apprentice Civil Engineer, 3 Porter street, Bellahouston, Govan.
SADLER, JOHN, Engineer, 551 Sauchiehall street, Glasgow.
THOMSON, JOHN, Engineer, 2 Glenavon terrace, Partick, Glasgow.

THE SECOND GENERAL MEETING was held in the Hall of the Institution, 207 Bath Street, on Tuesday, 20th November, 1900, at 8 P.M.

Mr ROBERT CAIRD, LL.D., F.R.S.E., President, occupied the chair.

The Minutes of the First General Meeting, held on 23rd October, 1900, were read, confirmed, and signed by the President.

Thereafter, the President called upon Mr F. J. ROWAN to offer the remarks he desired to make upon the Treasurer's Statement. Mr ROWAN then referred to the subject of Arrears of Subscriptions, and suggested that some means should be adopted to prevent a continuance of the present state of matters. (See page 295.)

Discussions on the following papers were begun and concluded:—

On "A New Gas Producer," by Dr J. A. PURVES, F.R.S.E.

On "Marine Engine Shafting," by Mr J. D. M'ARTHUR.

On the motion of the President, the authors were awarded votes of thanks for their papers.

A paper, by Mr B. C. LAWS, on "Rolling of Ships and the effect of Water-Ballast," was held as read.

The President announced that the following candidates had been elected, viz.:—

AS MEMBERS.

BAILLIE, ROBERT, Mechanical Engineer, 3 Kirkwood st., Ibrox, Glasgow.
BREWER, J. ALFRED, Mechanical Engineer, 249 West George st., Glasgow.
CAMPBELL, THOMAS, Ironfounder, Maryhill Ironworks, Glasgow.
CONNER, JAMES, Manager Britannia Engineering Works, Kilmarnock.
DAVIS, CHARLES H., Consulting Engineer, 99 Cedar st., New-York, U.S.A.
DODD, T. J., Principal Surveyor and Secretary, Lloyd's Register of Shipping, 342 Argyle street, Glasgow.
FAICKNEY, ROBT., Engineer, 3 Thornwood Terrace, Partick.
GOSLIN, ERNEST T., Electrical Engineer, 16 Eton place, Hillhead, Glasgow.
HAMILTON, JAMES, Manager Hallside Steel Works, 6 Kyle park, Uddingston.
HENDERSON, JAMES BLACKLOCK, D.Sc., Engineer, 250 Byres road, Glasgow.
HOGARTH, W. A., Engineer, 293 Onslow drive, Glasgow.
M'DOUGALL, ROBERT MELVIN, Coppersmith, 86 Dale street, Glasgow.
MORISON, WILLIAM B., Draughtsman, 7 Rowallan gardens, Broomhill, Glasgow.
MORTON, DAVID HOME, Civil Engineer, 130 Bath street, Glasgow.
NICOL, R. GORDON, Harbour Engineer, 15 Regent Quay, Aberdeen.
ROBERTSON, ROBERT, B.Sc., Civil Engineer, 154 West George st., Glasgow.
SIMPSON, WILLIAM, Civil Engineer, 15 Regent Quay, Aberdeen.
TAYLOR, BENSON, Ship Surveyor, 22 Hayburn crescent, Partick.
WILLIAMS, OWEN, R., B.Sc., Mechanical Engineer, Railway Appliance Works, Cathcart, Glasgow.

AS MEMBERS FROM GRADUATES' SECTION.

Mollison, Hector A., Engineer, 6 Hillside gardens, Partickhill, Glasgow.

Murdoch, J. A., Iron and Steel Merchant, 7 Park Circus place, Glasgow.

Murphy, B. Stewart, Lloyd's Surveyor, 342 Argyle street, Glasgow.

Thomson, James, Engineer, Hayfield, Motherwell.

AS GRADUATES.

Aitchison, John Wilson, Engineer, 213 Watt street, Glasgow.

Bunten, James C. (Jun.), Mechanical Engineer, Sheriff Riggs, Rutherglen.

Cameron, Angus Johnstone, Apprentice Shipbuilder, Greendale, Crossloan road, Govan.

Connell, William, Draughtsman, 174 Claythorn street, Glasgow.

Jack, Charles P. M., Draughtsman, 17 Albert drive, Pollokshields, Glasgow.

Loader, Edmund T., Apprentice Engineer, Y.M.C.A. Club, 100 Bothwell street, Glasgow.

M'Intyre, James N., Ship Draughtsman, Stalheim, Scotstounhill, Glasgow.

Whitelaw, Andrew H., Draughtsman, 14 West End Park street, Glasgow.

Williamson, Alexander, Engineer, Craiglarnet, Greenock.

Young, David H., Apprentice Engineer, 30 Albert drive, Pollokshields, Glasgow.

The Third General Meeting was held in the Hall of the Institution, 207 Bath Street, on Tuesday, 18th December, 1900, at 8 P.M.

Mr Robert Caird, LL.D., F.R.S.E., President, occupied the chair.

The Minutes of the Second General Meeting, held on 20th November, 1900, were read, confirmed, and signed by the President.

On the motion of the President, the discussion on the paper by Mr B. C. Laws on "Rolling of Ships and the Effect of Water-ballast" was postponed.

A paper by Mr D. B. Morison on "The Engineering Crisis in the Navy" was read. The discussion on this paper was begun and concluded, and on the motion of the President the author was awarded a vote of thanks for his paper.

A paper by Mr J. GRANT M'GREGOR on "Temporary Work on the Canadian Pacific Railway" was held as read.

The President announced that the following candidates had been elected, viz.:—

AS MEMBERS.

ANDERSON, WILLIAM MARTIN, Engineer, 100 Clyde street, Glasgow.

BALDERSTON, JOHN A., Engineer and Ironfounder, Vulcan Works, Paisley.

CAMPBELL, HUGH, Engineer, Halifax, Yorkshire.

CAMPBELL, JAMES, Engineer, 104 Bath street, Glasgow.

CLYNE, JAMES, Engineer, Messrs Clyne, Mitchell & Co., Commercial road, Aberdeen.

DUNCAN, W. LEES, Ironfounder, Partick Foundry, Partick.

GILLESPIE, JAMES, Jun., Mechanical Engineer, Margaretville, Orchard street, Motherwell.

HAY, RANKIN, Engineer, 44 Windsor terrace, Glasgow.

HENDRY, James C., Mechanical Engineer, 8 Fleming terrace, George street, Shettleston.

HOWARD, JOHN ROWLAND, Mechanical Engineer, Parkside place, Johnstone.

JEFF, WILLIAM, Foreman Engineer, 55 Brandon street, Motherwell.

LAMBERT, JOHN, Electrical Engineer, 5 Somerville place, Dundee.

LUSK, JAMES, Mechanical Engineer, 7 Claremont terrace, Glasgow.

M'GIBBON, W. C., Teacher of Marine Engineering, 2 Carlton Court, Bridge street, Glasgow.

MACLAY, DAVID M., Steel Works Manager, Dunowrne, Douglas street, Motherwell.

MACMILLAN, HUGH MILLAR, B.Sc., Ship Draughtsman, 9 Osborne place, Govan.

MARSHALL, JOHN, Boiler Maker, The Orchard, Motherwell.

PATTERSON, JAMES, Mechanical Engineer, 130 Elliot street, Glasgow.

PECK, NOEL E., Draughtsman, Newington, Southbrae Drive, Scotstounhill, Glasgow.

REID, JOHN, Shipbuilder, Glendune, Port-Glasgow.

REID, THOMAS, Jun., Engineer, Thread street, Paisley.

ROBERTSON, A. W., Shipbuilder, The Shipyard, Ardrossan.

ROSS, WILLIAM, Engineer, 101 St. Vincent street, Glasgow.

SALMOND, HENRY, Engineer, 93 Hope street, Glasgow.

STEVENSON, WM. F., General Manager, Ayrshire Foundry Co., Goulburn Argyle road, Saltcoats.

Stuart, James Tait, Engineers' Tool Maker, 2 Bowmont terrace, Kelvinside, Glasgow

Wedgwood, A., Jun., Engineer, Dennystown Forge, Dumbarton.

AS MEMBER FROM GRADUATES' SECTION.

Roger, George William, Shipbuilder, Shipyard, Irvine.

AS ASSOCIATES

Addie, Frank R., Shipowner, 8 Westbourne gardens, Kelvinside, Glasgow.

Maclay, Joseph P., Shipowner, 21 Bothwell street, Glasgow.

Miller, T. B., Chemical Engineer, Sandilands, Aberdeen.

Stewart, John G., Shipowner, 65 Great Clyde street, Glasgow.

AS GRADUATES.

Barty, Thomas Patrick William, Apprentice Civil Engineer, 375 Sauchiehall street, Glasgow.

Bissett, John, Apprentice Engineer, 35 Harriet street, Pollokshaws.

Black, James, Engineer, 212 Main street, Gorbals, Glasgow.

Carter, Douglas R., Engineer, Cockburn Hotel, 141 Bath street, Glasgow.

Crawford, Archibald, Engineer, 142 Eastfield street, Springburn, Glasgow.

Dyer, Henry, Electrical Engineer, c/o Mr Elliot, Balshagray avenue, Partick, Glasgow.

Maclaurin, James H., Apprentice Engineer, 34 Park Circus, Ayr.

McLellan, Alexander, Civil Engineer, Clyde Navigation Trust, 16 Robertson street, Glasgow.

McRae, John, Engineer, 118 Eastfield street, Springburn, Glasgow.

Millar, William P., Draughtsman, 22 Roslea drive, Dennistoun, Glasgow.

Morgan, Andrew, Draughtsman, 20 Minerva street, Glasgow.

Paterson, George, Engineering Draughtsman, 27 White street, Partick.

Smith, James, Draughtsman, 11 Broomhill Avenue, Partick.

The Fourth General Meeting was convened for the 22nd January, 1901, at 8 p.m., in the Hall of the Institution, 207 Bath Street Glasgow.

Mr Archibald Denny, F.R.S.E., Vice-President, occupied the chair.

The CHAIRMAN said that he supposed they were all aware that the tension under which they had been living for the last few days had been relieved, but in the saddest possible way. They had just learned that Her Majesty had passed away at 6·30 that evening. He did not think that they would expect him under the circumstances to make any extended remarks, but he thought that they were all labouring under a most intense state of feeling of loyalty and sorrow for what had occurred; and the Council had decided—and he felt that it would be their wish, as it was the Council's wish—that they should adjourn this meeting without further business. He therefore begged of them to join with him in expressing silently their intense admiration for Her Majesty. They had lived under no other Queen—he did not suppose there was a man present who had lived under another Sovereign—and it was all the more difficult to realise that we had lost out Mother-Queen, and he thought they would agree with the Council and himself that they should adjourn this meeting. All their business would simply be suspended until the next meeting that day month.

A scrutiny of the ballot papers showed that the following candidates had been elected:—

AS MEMBERS.

BREINGAN, WILLIAM D., Shipyard Manager, Barnes Place, Clydebank.

COMMON, JOHN B. A., Surveyor, Lloyd's Register, 342 Argyle St., Glasgow.

CRAIG, JOHN, Engineer, Broom, Newton-Mearns.

GALLETLY, ARCHIBALD A., Chief Draughtsman, 10 Greenlaw Avenue, Paisley.

HAIG, ROBERT, Engineer, The Mechanical Retorts Co., Ltd., Murray Street, Paisley.

HAND, HENRY, Surveyor, Lloyd's Register, 342 Argyle Street, Glasgow.

KEEGAN, THOMAS J. M., Naval Architect, 41 Margaret Street, Greenock.

MACFEE, JOHN, Telephone Engineer, Castle Chambers, W. Regent Street, Glasgow.

MCLELLAN, DUGALD, Civil Engineer, Caledonian Railway, 2 Oswald Street, Glasgow.

MCMILLAN, W. MACLEOD, Shipbuilder, Dockyard, Dumbarton.

McMURRAY, THOMAS H., Consulting Engineer, Rosetta Avenue, Belfast.
MAXTON, JAMES, Consulting Engineer, 4 Ulster Street, Belfast.
MILNE, GEORGE, Ship and Engine Surveyor, 10 Bothwell Street, Glasgow.
MÖLLER, W., Chief Surveyor to Germanischer Lloyd, 102 Bath Street, Glasgow.
PATERSON, JOHN, Chief Draughtsman, Edradour, Dalmuir.
RANKIN, ROBERT, Jun., Engineer, 6 Brighton Place, Govan.
SHARPE, ROBERT, Assistant Manager, Corporation Gas Works, Belfast.
SMAIL, DAVID, Consulting Engineer, 19 Waterloo Street, Glasgow.
SNEDDON, W. R., Shipbuilder, Shipyard, Irvine.
TURNER, THOMAS, Managing Director, Caledonian Works, Kilmarnock.
WARREN, THOMAS SAMUEL, Senior Ship Surveyor, Lloyd's Register, 342 Argyle Street, Glasgow.
WEIR, WILLIAM, Engineer, 231 Elliot Street, Glasgow.

AS MEMBERS FROM GRADUATES' SECTION.

ARNOTT, HUGH STEELE, Mechanical Engineer, Ravenswood, Annfield Road, Partick.
WALLACE, JOHN, Jun., Engineer, 123 East Princes Street, Helensburgh.
WEMYSS, GEORGE B., Engineer, 57 Elliot Street, Hillhead, Glasgow.

AS ASSOCIATES.

BAIN, W. B., Manganese Bronze and Brass Co., 65 Waterloo Street, Glasgow.
NAPIER, JAMES, Iron Merchant, 33 Oswald Street, Glasgow.
SMITH, GEORGE, Shipowner, 75 Bothwell Street, Glasgow.

AS GRADUATES.

BUTLER, JAMES S., Ship Draughtsman, 21 Peel Street, Partick.
LOWE, ROBERT, Engineer, 2 Maxwell Terrace, Leslie Street, Pollokshields, Glasgow.
MACKAY, W. MORRIS, Civil Engineer, 62 Cromwell Street, Glasgow.
MAITLAND, JOHN M., Apprentice Engineer, 214 Renfrew Street, Glasgow.
YOUNG, JAMES M., Patternmaker, 39 King Street, Pollokshields, Glasgow.

THE FIFTH GENERAL MEETING was held in the Large Hall of the Young Men's Christian Association, Bothwell Street, on Tuesday, 19th February, 1901, at 8 P.M.

Prof. ARCHIBALD BARR, D.Sc., Vice-President, occupied the chair.

The Minutes of the Third and Fourth General Meetings held on the 18th December, 1900, and 22nd January, 1901, respectively, were read, confirmed, and signed by the CHAIRMAN.

The Secretary then read an Address, from the President and Council of the Institution, to His Majesty the King. (The text of the Address appears on page 305.)

Thereafter the discussion on the paper by Mr B. C. LAWS, on "Rolling of Ships and the Effect of Water Ballast," was begun and concluded.

On the motion of the Chairman, Mr Laws was awarded a vote of thanks for his paper.

The discussion on the paper by Mr J. GRANT M'GREGOR, on "Temporary Work on the Canadian Pacific Railway," was postponed.

A paper was read by the Hon. C. A. PARSONS, M.A., F.R.S., on "The Marine Steam Turbine and its Application to Fast Vessels;" the discussion on this paper was begun and adjourned.

The Chairman announced that the following Candidates had been elected, viz.:—

AS MEMBERS.

BARROW, JOSEPH, Engineer, Messrs Thomas Shanks & Co., Johnstone.

CARVER, THOMAS A. B., B.Sc., Civil Engineer, 118 Napiershall Street, Glasgow.

COOPER, HENRY B., Mechanical Engineer, Parkend Road, Saltcoats.

DEWRANCE, JOHN, Engineer, Great Dover Street, London.

KEELING, THOMAS, Civil Engineer, 42 Prospecthill Road, Langside, Glasgow.

MORRISON, WILLIAM, Civil Engineer, 11 Sherbrooke Avenue, Pollokshields, Glasgow.

MUIRHEAD, JAMES A., Civil Engineer, Park House, Springburn, Glasgow.

SURTEES, FRANCIS VERE, Shipyard Manager, Messrs Lobnitz & Co., Ltd., Renfrew.

AS ASSOCIATES.

FORREST, WILLIAM, Student Naval Architecture, 114 Dixon Avenue, Glasgow.

Hardie, Thomas G., Shipowner, 11 Bothwell Street, Glasgow.
Thomson, William H., Contractor, 32 Albert Road, East, Crosshill, Glasgow.

AS GRADUATES.

Irons, James Hay, Mechanical Engineer, 4 Albert Drive, Crosshill, Glasgow.
M'Nair, Andrew, Apprentice Engineer, Norwood, Prestwick Road, Ayr.
Ramsay, John C., Marine Engineer, 9 Minerva Cottages, Clydebank.
Sproule, Frank, Civil Engineer, 76 Stevenson Drive, Shawlands, Glasgow.

THE SIXTH GENERAL MEETING was held in the hall of the Institution, 207 Bath Street, on Tuesday, 19th March, 1901, at 8 P.M.

Mr ARCHIBALD DENNY, F.R.S.E., Vice-President, occupied the chair.

The Minutes of the Fifth General Meeting, held on the 19th February, 1901, were read, confirmed, and signed by the Chairman.

The following nominations for Office-Bearers, Session 1901-1902, were then made:—

President—Mr WILLIAM FOULIS; *Vice-Presidents*—Messrs THOMAS KENNEDY and R. T. MOORE, B.Sc.; *Members of Council*—Messrs THOMAS ARTHUR ARROL, ARCHIBALD BARR, D.Sc., WILLIAM BROWN, ALEXANDER GRACIE, C. P. HOGG, GEORGE M'FARLANE, F. J. ROWAN, and JAMES ROWAN

The discussion on the paper by Mr J. GRANT M'GREGOR on "Temporary Work on the Canadian Pacific Railway," was again postponed.

The discussion on the paper by the Hon. C. A. PARSONS, M.A., F.R.S., on "The Marine Steam Turbine and its Application to Fast Vessels," was resumed and concluded.

On the motion of the Chairman, Mr Parsons was awarded a vote of thanks for his paper.

A paper on "The City Union Railway Widening and Extension of St. Enoch Station," by Mr WILLIAM MELVILLE, was read.

A paper on "Administration of Workshops, with Special Reference to Oncost: What it should include: Its Allocations and Recovery," by Mr DAVID COWAN, was held as read.

The Chairman announced that the following Candidates had been elected, viz. :—

AS MEMBERS.

ADAMSON, PETER HOGG, Naval Architect, 11 Fairlie Park Drive, Partick.
ALEXANDER, JOHN, Engineer, Barrhead.
ANDERSON, J. GODFREY, B.Sc., Mechanical Engineer, c/o Messrs James Templeton & Co., Greenhead, Glasgow.
BUTTERS, JAMES THOMAS, Engineer, Percy Crane and Engine Works, Glasgow.
CARMICHAEL, ANGUS T., Engineer, 3 Harvie Street, Paisley Road, W., Glasgow.
FULLERTON, JAMES, Shipbuilder, Abbotsburn, Paisley.
FULLERTON, ROBERT A., Mechanical Engineer, 32 St. Vincent Crescent, Glasgow.
HENDERSON, ROBERT, Steel Founder, 777 London Road, Glasgow.
HUNTER, MATTHEW, Shipbuilder, Burnbank, Whiteinch, Glasgow.
HUTCHEON, JAMES, Chief Draughtsman, 46 Park Drive, South, Whiteinch.
LAMBIE, ALEXANDER, Shipbuilder, Ravenshall, Port-Glasgow.
LINDSAY, W. F., Engineer, 203 Nithsdale Road, Pollokshields, Glasgow.
MACDONALD, JOHN DRON, Marine Engineer, 3 Rosemount Terrace, Ibrox, Glasgow.
MACNICOLL, NICOL, Marine Surveyor and Naval Architect, 6 Dixon Street, Glasgow.
MCILVENNA, JOHN, Surveyor to Lloyd's Register, 13 Caird Drive, Partickhill, Glasgow.
MILLER, ARTHUR C., Marine Engineer, 12 Caird Drive, Partickhill, Glasgow.
PETROFF, ALEXANDER, Naval Engineer, I.R.N , 60 Thornton Avenue, Streatham-Hill, London. S.W.
PLUMMER, W. E., Engineer, Soho Works, Bradford.
RICHARDS, T. J., Principal Officer, Board of Trade, 7 York Street, Glasgow.
SCOTT, JAMES G., Engineer, 34 Montague Street, Glasgow.
SPROULE, A., Consulting Engineer, 34 Union Row, Aberdeen.
STEPHEN, J. M., Engineer, 12 Campania Place, Govan.

AS MEMBERS FROM GRADUATES' SECTION.

FULTON, NORMAN O., Engineer, Woodbank, Mount Vernon, Glasgow.
KINMONT, DAVID W., Civil Engineer. Contractor's Office, Larkhall.
LENNOX, ALEXANDER, Engineer, 34 Glasgow Street, Hillhead, Glasgow.

AS ASSOCIATE.

McKISSOCK, PETER, Contractor, 180 Hope Street, Glasgow.

AS GRADUATES.

ALEXANDER, WILLIAM, Engineer, 4 Kelvinbank Ter., Sandyford, Glasgow.
BERRY, DAVIDSON, Electrical Engineer, 21 Grange Terrace, Langside, Glasgow.
GRAHAM, JOHN, Mechanical Engineer, 15 Armadale Street, Dennistoun, Glasgow.
MACHARG, W. S., Draughtsman, The Grove, Ibrox, Glasgow.
SAYERS, W. H., Engineer Apprentice, 100 Bothwell Street, Glasgow.

THE ANNUAL GENERAL MEETING was held in the Hall of the Institution on Tuesday, 23rd April, 1901, at 8 P.M.

Mr ROBERT CAIRD, LL.D., F.R.S.E., President, occupied the chair.

The Minutes of the General Meeting, held on 19th March, 1901, were read, approved, and signed by the PRESIDENT.

On the motion of the President, Messrs A. S. BIGGART and H. A. MAVOR were appointed to scrutinise the ballot papers.

The scrutineers having retired and submitted their report, the President announced that Mr WILLIAM FOULIS had been elected President; Messrs THOMAS KENNEDY and R. T. MOORE, B.Sc., Vice-Presidents; and Messrs THOMAS ARROL, WILLIAM BROWN, ALEXANDER GRACIE, JAMES ROWAN, and Prof. ARCHIBALD BARR, D.Sc., Members of Council for Sessions 1901-02 and 1902-03.

On the motion of Mr JAMES MOLLISON, Messrs F. J. ROWAN and R. T. NAPIER were elected Auditors of the Annual Accounts.

The following awards were made for papers read during the Session 1899-00:—

(1) A Premium of Books to Mr A. B. McDONALD for his paper on "Glasgow Main Drainage."

(2) A Premium of Books to Mr DAVID COWAN for his paper on "Workshop Administration: With Special Reference to Tracking Work and Promptly Ascertaining Detailed Costs and Profits."

The discussions on the following papers were begun and concluded:—

On "Temporary Work on the Canadian Pacific Railway," by Mr J. GRANT M'GREGOR.

On "City Union Railway Widening and Extension of St. Enoch Station," by Mr WILLIAM MELVILLE; and

On "Administration of Workshops: With Special Reference to Oncost; What it should Include; Its Allocation and Recovery," by Mr DAVID COWAN.

On the motion of the President, the authors were awarded votes of thanks for their papers.

The President announced that the following candidates had been elected, viz.:—

AS MEMBERS.

ANDERSON, F. CARLTON, Electrical and Mechanical Engineer, 53 Bothwell Street, Glasgow.

DUNLOP, WILLIAM A., Engineer Superintendent, Harbour Office, Belfast.

DUNN, JAMES, Engineer, Collalis, Scotstounhill, Glasgow.

GORDON, A. G., Engineer, Ardclutha, Gourock.

HUMMEL, HORACE JAMES JORDAN, Civil Engineer, c/o Pintsch's Patent Lighting Co., 38 Leadenhall Street, London, E.C.

JEFFREY, ARTHUR W., Surveyor, Board of Trade, 71 Dixon Avenue, Glasgow.

MOIR, THOMAS, Draughtsman, 10 Syriam Terrace, Springburn, Glasgow.

MUNRO, JOHN, Marine Engineer, 7 Ibrox Place, Govan.

SHANKS, JAMES KIRKWOOD, Engineer, Beechfield, Denny.

AS MEMBER FROM GRADUATES' SECTION.

DAVIES, HARRY LLEWELYN, Managing Director of Messrs Cochran & Co., Limited, Newbie, Annan.

AS GRADUATES.

DUNCAN, ALEXANDER, Apprentice Engineer, 15 Princes Street, Pollokshields, Glasgow.

HOWIE, WILLIAM, Engineer, Cathkin View, 14 Crossloan Road, Govan.

HUTTON, WILLIAM R., Jun., Ship Draughtsman, Lenore, Park Grove, Whiteinch.

KIMURA, N., Ship Draughtsman, 26 Holyrood Quadrant, Glasgow.

MACNICOLL, DONALD, Apprentice Marine Engineer, Gryfe Craig, Kilmalcolm

ROBERTS, JAMES, Mechanical Engineer, c/o Mrs Pollock, 9 Walmer Terrace, Ibrox, Glasgow.

WARD, G. K., Shipbuilder Apprentice, Dumbarton.

WARD, JOHN, Jun., Engineer Apprentice, Dumbarton.

REPORT OF THE COUNCIL.

Session 1899-1900.

The Council has to report that the membership of the Institution continues to increase.

The changes which have taken place in the Roll are shown in the following statement:—

Session 1898-99.		Session 1899-1900.	Increase.
Honorary Members,	9	9	
Members,	799	832	33
Associates,	64	74	10
Graduates,	288	328	40
	1160	1243	83

The meetings held during the Session were eight in number at which the subjoined list of papers, in addition to the President's Address, were read and discussed:—

"Lighthouse Engineering at Home and Abroad"—by Mr John A. Purves, D.Sc., F.R.S.E.

"A Record of Experiments on Flow of Water over Bell-mouthed Pipes"—by Mr John Barr.

"The Means Adopted for Moderating the Rolling of Ships"—by Mr W. J. Luke.

"On Pile-driving Machines"—by Mr F. J. Rowan.

"The Electric Wiring of Buildings"—by Mr W. A. Chamen.

"The Action of Electric Tramway Currents on Submarine Telegraph Cables and other Electric Circuits"—by Professor Andrew Jamieson, F.R.S.E.

"A New Balanced Piston-Valve and its Application to Four-Crank Engines"—by Mr William O'Brien.

"Typical Forms of Racing Yachts"—by Mr J. R. Barnett.

"Workshop Administration"—by Mr David Cowan.

"Glasgow Main Drainage"—by Mr A. B. McDonald.

The Meetings held by the Graduates' Section were six in number, at which, in addition to the President's Address, the undermentioned papers were read and discussed:—

"Some Notes on Steering and the Design of Rudders"—by Mr A. J. Kay.

"Marine Engine Governors"—by Mr T. C. Jones.

"Stern Brackets for Twin Screw Steamers"—by Mr S. B. Ralston.

"Water-Tube Boilers"—by Mr J. Orr.

"Tube Manufacture"—by Mr James Richmond.

The Silver Medal for the best paper in this Section was awarded to Mr J. Orr for his paper on "Water-Tube Boilers."

The Council records with regret the death of the following Members:—Messrs John Carter Cameron, Joseph C. Campbell, W. A. Charlton, Thomas Daniels, James Deas, Archibald Gilchrist, Archibald Kerr, Alexander Kidd, Edward MacKay, John Napier, Robert Andrew Robertson, Peter Stewart, Sir William Renny Watson, John Wildridge, Alexander Hall Wilson; and Mr George Smith, Associate.

The Institution was represented, during the Session, on the Board of Trade Consultative Committee by Mr James Denny, Mr James Hamilton, and Mr James Weir.

On Lloyd's Technical Committee by Mr Sinclair Couper, Mr James Gilchrist, Mr Frank P. Purvis, and Mr John Ward.

On the Board of Governors of the Glasgow School of Art by Mr James Mollison.

On the Board of Governors of the Glasgow and West of Scotland Technical College by Mr John Ward.

The Council desires to express the thanks of the Institution to these gentlemen for their services in these Institutions.

The James Watt Dinner took its usual place as the social function of the Institution for the year. It was held in the Windsor Hotel on Saturday evening, 20th January, 1900, and was attended by 270 gentlemen, including members and friends.

The Council is arranging an International Engineering Congress, under the Presidency of Lord Kelvin, in connection with the Glasgow International Exhibition of 1901. The leading engineering and kindred societies have already accorded their hearty support to the Congress. An influential London Committee has been formed and the Congress gives every promise of being a perfect success.

TREASURER'S

INCOME AND EXPENDITURE ACCOUNT

GENERAL

ORDINARY INCOME.		1899-1900.	*1898-99.*
I. *Annual Subscriptions received—*			
713 Members at £1 10 0	£1069 10 0		
67 Associates ,, 1 0 0	67 0 0		
267 Graduates ,, 0 10 0	133 10 0		
		£1270 0 0	*£1242 10 0*
II. *Arrears of Subscriptions received,*		39 0 0	*66 10 0*
III. *Sales of Transactions,*		10 13 0	*14 9 4*
IV. *Interests and Rents—*			
Interest on Clyde Trust Mortgage for £300, less tax, ...	£9 8 1		*9 8 4*
Students' Institute C.E., for use of Library, ...	11 12 0		*12 6 0*
Interest on Deposit Receipts, ...	9 8 11		*6 0 6*
		30 9 0	*[27 14 10]*
EXTRAORDINARY INCOME.			
Surplus from Excursion, ...		5 4 2	
Surplus from "James Watt" Dinner, ...			*3 16 5*
		£1355 6 2	*£1355 0 7*

STATEMENT.

FOR YEAR ENDING 30TH SEPTEMBER, 1900.

FUND.

ORDINARY EXPENDITURE.		1899-1900.	*1898-99.*
I. *General Expenses—*			
Secretary's Salary, ...	£300 0 0		*£300 0 0*
Institution's proportion of net cost of maintenance of Buildings,	106 7 4		*118 16 10½*
Interest on Medal Funds invested in Buildings, ...	21 12 0		*21 12 0*
Library Books, ...	28 3 10		*22 18 0*
Binding Periodicals and Papers,	6 3 0		*6 15 10*
Stationery and Postages, etc.,	36 5 1		*37 5 4*
Office Expenses, ...	35 4 3		*35 12 9*
Advertising, Insurance, etc., ...	5 7 6		*5 4 10*
Assistance at Meetings, ...	. . .		*1 4 6*
		£539 3 0	*[549 10 1½]*
II. "*Transactions*" *Expenses—*			
Printing and Binding,	£372 3 10		*340 8 7*
Lithography, ...	118 6 0		*137 1 5*
Postages, ...	66 17 5		*58 13 10*
Reporting, ...	16 18 0		*14 7 3*
Delivery of Annual Volume, ...	11 10 0		*10 10 0*
		585 15 3	*[561 1 1]*
III. *Awards—*			
Premiums for Papers, ...		24 0 11	*9 19 8*
EXTRAORDINARY EXPENDITURE.			
Deficit on "James Watt Dinner,"		6 13 11	. . .
IV. *Surplus* carried down, ...		199 13 1	*234 9 8½*
		£1355 6 2	*£1355 0 7*

BALANCE SHEET, AS AT

LIABILITIES.			As at 30th Sept., 1900.	*As at 30th Sept., 1899.*
I. *Sundry Creditors,*			£604 19 0	*£15 11 6*
II. *Subscriptions paid in advance,*			23 10 0	*17 10 0*
III. *Medal Funds—*				
Marine Engineering—				
Balance as at 1st Oct., 1899,	£512 14 1			
Interest received during year,	14 3 4	526 17 5		*512 14 1*
Railway Engineering—				
Balance as at 1st Oct., 1899,	£321 1 10			
Interest received during year,	8 14 3	329 16 1		*321 1 10*
Graduates'—				
Balance as at 1st Oct., 1899,	£25 14 3			
Cost of medal, £1 7s 6d; *less* interest received during year, 16s 7d,	0 10 11	25 3 4		*25 14 3*
			881 16 10	*[859 10 2]*
IV. *Capital Accounts—*				
General Fund—				
Balance as at 1st Oct., 1899,	£1284 8 5			
Surplus, 1899-1900,	199 13 1	1484 1 6		*1284 8 5*
Building Fund—				
Balance as at 1st Oct., 1899,	£2156 10 1			
Life Members' Subscriptions, £20; Entry money, £30.	50 0 0	2206 10 1		*2156 10 1*
			3690 11 7	*[3440 18 6]*
			£5200 17 5	*£4333 10 2*

30TH SEPTEMBER, 1900.

ASSETS.			As at 30th Sept., 1900.	*As at 30th Sept., 1899.*
I. *Heritable Property*— Total Cost,		£7094 16 3		
Of which one-half belongs to Institution, ...			£3547 8 1	*£3047 8 1*
II. *Investment*— Clyde Trust Mortgage, ...			300 0 0	*300 0 0*
III. *Books in Library*— Valued at, say			500 0 0	*500 0 0*
IV. *Furniture and Fittings*— Valued at, say			65 10 0	*65 10 0*
V. *Sundry Debtors*—			26 0 0	*9 1 10*
VI. *Arrears of Subscriptions*— Session 1899-1900—				
74 Members at £1 10/,		£111 0 0		
7 Associates at £1,		7 0 0		
69 Graduates at 10/,		34 10 0		
		£152 10 0		
Previous sessions —				
26 Members,	£91 0 0			
3 Associates,	8 0 0			
36 Graduates,	40 10 0	£139 10 0		
Total,		£292 0 0		
Valued at, say			50 0 0	*50 0 0*
VII. *Cash*— In Bank,				
On Deposit Receipt, ..		£79 17 11		
On Current Account, ...		590 6 10		
In Secretary's hands, ...		41 14 7	711 19 4	*361 10 3*
			£5200 17 5	*£4333 10 2*

ABSTRACT OF "HOUSE EXPENDITURE" ACCOUNT FOR SESSION 1899-1900.

INCOME.	12 months, to 30th Sep., 1900.	*12 months, to 30th Sep., 1899.*	EXPENDITURE.	12 months, to 30th Sep., 1900.	*12 months, to 30th Sep., 1899.*
Rents for Letting Rooms, ...	£121 7 6	*£77 0 0*	Salary to Curator, ...	£135 0 0	*£135 0 0*
Balance, being excess Expenditure, ...	234 7 8	*257 19 9*	Salary to Attendant at Library, Cleaning, etc., ...	70 9 2	*61 1 6*
Payable by Institution, ... £106 7 4			Feu-duty, Taxes, and Insurance,	36 11 2	*41 8 2*
,, ,, Philosophical Society, 128 0 4			Interest on Bond, ...	47 19 0	*49 6 0*
			Alterations, Repairs & Renewals,	25 1 6	*12 1 3*
			Coal, Gas, and Electric Light,	37 19 6	*35 12 8*
			Stationery, Postages, and Incidental Expenses, ...	2 14 10	*0 10 2*
	£355 15 2	*£334 19 9*		£355 15 2	*£334 19 9*

Note.—The Account of the House Committee, of which the above is an abstract, is kept by Mr John Mann, C.A., Treasurer to the Committee, and is periodically audited by the Auditors appointed by the Institution and the Philosophical Society.

EDWARD H. PARKER, *Secretary to the House Committee.*

GLASGOW, 17*th October*, 1900.—We have examined the foregoing Financial Statement of the Treasurer, the Accounts of the Marine and Railway Engineering Medal Funds, the Graduates' Medal Fund, the Building Fund, and the "House Expenditure" Account, and find the same duly vouched and correct, the Amounts in Bank being as stated.

The Capital of the Medal Funds is on loan to the Building Fund at interest.

(Signed) F. J. ROWAN, } AUDITORS.
R. T. NAPIER, }

REPORT OF THE LIBRARY COMMITTEE.

The additions to the Library during the year include 26 volumes by purchase; 12 volumes and 2 parts by donation; while 67 volumes and 39 parts were received in exchange for the Transactions of the Institution. Of the periodical publications received in exchange, 23 were weekly, 17 monthly, and 3 quarterly. Forty-four volumes were bound during the year.

The Library now comprises 2724 volumes.

As the proceedings of the most important engineering societies are to be found in the Library of the Institution, the Committee begs to draw the attention of Members to the existence of this particular section.

The work of preparing a new Catalogue of the Library has been initiated with the kind assistance of Mr Barrett of the Mitchell Library. The continuation and completion of this work is earnestly commended to the new Committee.

DONATIONS TO THE LIBRARY.

Eiffel, G. Travaux Scientifiques Exécutés a la Tour de Trois Cents Mètres, de 1899 a 1900. 4to. Paris, 1900. From the Author.

Eiffel, G. La Tour de Trois Cents Mètres. 2 vols. (Texte et Planches.) Folio. Paris, 1900. From the Author.

Journal of the West of Scotland Iron and Steel Institute. Vols. I. to VII., 1892-1900. Glasgow. From the Institute.

Lloyd's Register of Shipping (2 vols); and 1 volume of Rules and Regulations. 1900-1901. From Lloyd's Committee.

Manchester Steam-Users' Association. Memorandum by Chief Engineer, presented at the Annual Meeting, May, 1900. From the Association.

Parsons, C.A. Report upon the Tests made in January, 1900, of a 1000-kilowatt Steam Turbine and Alternator, by W. H. Lindley, M. Schroter, and H. F. Weber. Folio. 1900. From the Author.

Queen's College, Galway: Calendar, 1900-01.

Todd, John, and W. C. M'Gibbon. Marine Engineers' Board of Trade Examinations. Glasgow, 1901. From the Authors.

BOOKS ADDED TO THE LIBRARY BY PURCHASE.

Acworth, W. M. Railways of England. 5th edition. 1900.

Arnold, John Oliver. Steel Works Analysis. 2nd edition. 1900.

Ball, Sir Robert Stawell. Treatise on the Theory of Screws. 4to. Cambridge, 1900.

Barnaby, Sydney W. Marine Propellers. 4th edition. 1900.

Beaumont, W. Worby. Motor Vehicles and Motors: Their Design, Construction, and Working by Steam, Oil, and Electricity. 4to. Westminster, 1900.

Clarke, J. Wright. Hydraulic Rams: Their Principles and Construction. 1900.

Clowes, W. L. Royal Navy: A History from the Earliest Times to the Present. Vols. I. to V., 1897-1900.

Dallmeyer, Thomas R. Telephotography: An Elementary Treatise on the Construction and Application of the Telephotographic Lens. 4to. 1899.

Davey, Henry. Principles, Construction, and Application of Pumping Machinery. 1900.

Denny, G. A. Diamond Drilling for Gold and other Minerals. 1900.

Gray, Andrew. Treatise on Physics. Vol. I.—Dynamics and Properties of Matter. 1901.

Hiscox, Gardner D. Horseless Vehicles, Automobiles, Motor Cycles, operated by Steam, Hydro-Carbon, Electric and Pneumatic Motors. 1900.

Holmes, G. C. V. Ancient and Modern Ships. Part I.—Wooden Sailing Ships. 1900.

Howie, Malverd A. Retaining-Walls for Earth. 3rd edition. New York, 1896.

King, F. H. Irrigation and Drainage: Principles and Practice of the Cultural Phases. New York, 1899.

Maxwell, J. Clark. Matter and Motion. 1894.

Merriman, Mansfield. Elements of Sanitary Engineering. 2nd Edition. New York, 1899.

Naval Annual, 1901.

Parsell, Henry V. A., jun., and Arthur J. Weed. Gas Engine Construction. 1900.

Parshall, H. F. and H. M. Hobart. Electric Generators. 4to. 1900.

Thomson, J. J. Discharge of Electricity through Gases. Westminster, 1898.

Wordingham, C. H. Central Electrical Stations: Their Design, Organisation, and Management. 1901.

THE INSTITUTION EXCHANGES TRANSACTIONS WITH THE FOLLOWING SOCIETIES, &C.:—

American Institute of Electrical Engineers.

American Philosophical Society.

American Society of Civil Engineers, New York.

American Society of Mechanical Engineers, New York.

Association des Ingénieurs des Êcoles Spèciales de Gand, Belgium.

Association Technique Maritime, Paris.

Austrian Engineers' and Architects' Society, Wien.

Bristol Naturalists' Society, Bristol.

British Association for the Advancement of Science, London.

Bureau of Steam Engineering, Navy Department, Washington.

Canadian Institute, Toronto.

Canadian Society of Civil Engineers, Montreal.

Edinburgh Architectural Association.

Engineering Association of New South Wales, Sydney.
Engineering Society of the School of Practical Science, Toronto.
Engineers' and Architects' Society of Naples, Naples.
Franklin Institute, Philadelphia, U.S.A.
Geological Survey of Canada, Ottowa.
Hull and District Institution of Engineers and Naval Architects, Hull.
Institute of Marine Engineers, London.
Institution of Civil Engineers, London.
Institution of Civil Engineers of Ireland, Dublin.
Institution of Junior Engineers, London.
Institution of Mechanical Engineers, London.
Institution of Naval Architects, Japan.
Institution of Naval Architects, London.
Iron and Steel Institute, London.
Liverpool Engineering Society, Liverpool.
Literary and Philosophical Society of Manchester, Manchester.
Lloyd's Register of British and Foreign Shipping, London.
Manchester Association of Engineers, Manchester.
Midland Institute of Mining, Civil, and Mechanical Engineers, Barnsley.
Mining Institute of Scotland, Hamilton.
North-East Coast Institution of Engineers and Shipbuilders, Newcastle-on-Tyne.
North of England Institute of Mining and Mechanical Engineers, Newcastle-on-Tyne.
Patent Office, London.
Philosophical Society of Glasgow.
Royal Dublin Society, Dublin.
Royal Scottish Society of Arts, Edinburgh.
Sanitary Institute of Great Britain, London.
Schiffbautechnischen Gesellschaft, Berlin.
Scientific Library, U.S. Patent Office, Washington, U.S.A.
Shipmasters' Society, London.
Smithsonian Institution, Washington, U.S.A.

Société d'Encouragement pour l'Industrie Nationale, Paris.
Société des Ingénieurs Civils de France, Paris.
Société des Sciences Physiques et Naturelles de Bordeaux, Bordeaux.
Société Industrielle de Mulhouse, Mulhouse.
Society of Arts, London.
Society of Arts, Massachusetts Inst. of Technology, Boston.
Society of Engineers, London.
Society of Naval Architects and Marine Engineers, New York, U.S.A.
South Wales Institute of Engineers, Cardiff.
Technical Society of the Pacific Coast, San Francisco, U.S.A.
West of Scotland Iron and Steel Institute, Glasgow.

COPIES OF THE TRANSACTIONS ARE FORWARDED TO THE FOLLOWING COLLEGES, LIBRARIES, &C.:—

Advocates' Library, Edinburgh.
Bodleian Library, Oxford.
British Corporation for the Survey and Registry of Shipping, Glasgow.
British Museum, London.
Cornell University, Ithaca, U.S.A.
Dumbarton Free Public Library, Dumbarton.
Glasgow and West of Scotland Technical College, Glasgow.
Glasgow University, Glasgow.
Lloyd's Office, London.
Mercantile Marine Service Association, Liverpool.
M'Gill University, Montreal.
Mitchell Library, Glasgow.
Royal Naval College, Greenwich.
Stevens Institute of Technology, Hoboken, U.S.A.
Stirling's Library, Glasgow.
Trinity College, Dublin.
Underwriters' Rooms, Glasgow.
Do. Liverpool.
University College, London.
University Library, Cambridge.
Yorkshire College, Leeds.

PUBLICATIONS RECEIVED PERIODICALLY IN EXCHANGE FOR INSTITUTION TRANSACTIONS:—

American Machinist.
American Manufacturer and Iron World.
British Refrigeration.
Cassier's Magazine.
Colliery Guardian.
Contract Journal.
Engineer.
Engineering.
Engineering Magazine.
Engineering and Mining Journal, New York.
Engineers' Gazette.
Feilden's Magazine.
Indian Engineering.
Iron and Coal Trades' Review.
Iron and Steel Trades' Journal.
Journal de l'Êcole Polytechnic.
L'Industria.
Machinery Market.
Marine Engineer.
Mariner.
Mechanical Engineer.
Mechanical World.
Nature.
Portefeuille Économique des Machines
Practical Engineer.
Revue Industrielle.
Shipping World.
Stahl und Eisen.
Steamship.
The Indian and Eastern Engineer.
Transport.

H. A. MAVOR,
Hon. Librarian and Convener.

The Library of the Institution is open daily (except Saturdays) during the Winter Session from 9.30 A.M. till 8 P.M., and on Meeting Nights of the Institution and Philosophical Society till 10 P.M.; throughout the Summer months from 9.30 A.M. till 5 P.M., save during July, when it is closed for the Glasgow Fair Holidays, and open for the remainder of the month from 1 P.M. to 5 P.M.; and every Saturday from 9.30 A.M. till 2 P.M., during the Winter Session, and from 9.30 A.M. till 1 P.M. during the Summer months.

Books will be lent on presentation of Membership Card to the Sub-Librarian.

Members have also the privilege of consulting the Books in the Library of the Philosophical Society.

The use of the Library and Reading Room is open to Members, Associates, and Graduates.

The Portrait Album lies in the Library for the reception of Members' Portraits. Members are requested when forwarding Portraits to attach their Signatures to the bottom of Carte.

The Library Committee are desirous of calling the attention of Readers to the "Recommendation Book," where entries can be made of titles of books suggested as suitable for addition to the Library.

Copies of the Library Catalogue and Supplement, price 6d; or separately, 3d each, may be had at the Library, or from the Secretary.

A List of the Papers read and Authors' Names, from the First to the Thirty-Third Sessions, will be found in Vol. XXXIII. of the Transactions.

As arranged by the Council, a Register Book for Graduates now lies in the Library for the inspection of Members, the object being to assist Graduates of the Institution in finding suitable appointments.

Annual Subscriptions are due at the commencement of each Session; viz.:—

MEMBERS, £1 10s; ASSOCIATES, £1; GRADUATES, 10s.
LIFE MEMBERS, £20; LIFE ASSOCIATES, £15.

Membership Application Forms can be had from the Secretary or from the Sub-Librarian, at the Rooms, 207 Bath Street.

The Council, being desirous of rendering the Transactions of the Institution as complete as possible, earnestly request the co-operation of Members in the preparing of Papers for reading and discussion at the General Meetings.

Early notice of such Papers should be sent to the Secretary, so that the dates of reading may be arranged.

Copies of the reprint of Vol. VII., containing a paper on "The Loch Katrine Water Works," by Mr J. M. Gale, C.E., may be had from the Secretary; price to Members, 7s 6d.

Members of this Institution, who may be temporarily resident in Edinburgh, will, on application to the Secretary of the Royal Scottish Society of Arts, at his office, 117 George Street, be furnished with Billets for attending the meetings of that Society.

The Meetings of the Royal Scottish Society of Arts are held on the 2nd and 4th Mondays of each month, from November till April, with the exception of the 4th Monday of December.

OBITUARY.

Honorary Member.

THE RIGHT HON. LORD ARMSTRONG, C.B., was born at Newcastle-on-Tyne on 26th November, 1810. He was the son of a corn merchant and alderman of that city, and received his early education at Bishop Auckland Grammar School. On leaving school, he was articled to Mr Armour Donkin, solicitor, and later studied in the office of his brother-in-law, Mr W. H. Watson, afterwards Baron Watson, then a special pleader in the Temple. His legal education being complete, he returned to Newcastle, and became junior partner in the firm afterwards known as Messrs Donkin, Stable, & Armstrong. Possessing a natural aptitude for mechanics, he made experiments in his leisure time, and as the love for mechanical research grew, the practice of the law became more and more distasteful to him, until finally he abandoned it in 1847, and in conjunction with Alderman Potter, Alderman Donkin, Mr George Cruddas, and Mr Richard Lambert, he established a small works for all kinds of hydraulic machinery at Elswick.

In 1854, the events of the Crimean War led him to turn his attention to the improvement of ordnance, and he worked steadily on this problem until 1858, when his investigations were brought to a successful issue. He commenced by constructing a small 3-pounder gun on the now well-known plan of shrinking hoops or rings on to an inner steel tube extending the whole length of the weapon, the rifling being cut on the interior. This gun was tried by the War Office with such success that experiments on a larger scale were recommended. It was then bored up to a 5-pounder, and, as it still gave satisfactory results, an 18-pounder was constructed, and later a 32-pounder. In 1859 he presented his invention to the nation, and was appointed Engineer to the War Department at a salary of £2000 per annum; he also received the honour of knighthood, and was created a Companion of the Bath. He severed his connection with the Royal Gun Factory in 1863, and thereafter devoted his energies to the improvement of gun mountings, and to the application of hydraulic machinery to heavy artillery. With him electricity was ever a favourite study, and in recent years he carried out a number of interesting experiments on the high-tension discharge. Many of these experiments are described and illustrated in an elaborate work entitled "Electric Movement in Air and Water," a copy of which he presented to the library of the Institution.

In 1887 he was created a Baron, and took the title of Lord Armstrong of Craigside.

Lord Armstrong was a Fellow of the Royal Society, Honorary LL.D. of Cambridge, Honorary D.C.L. of Oxford, and Honorary Master of Engineers of Dublin. He had the Albert Medal of the Royal Society of Arts for his inventions in hydraulic machinery, and the Bessemer Gold Medal for his services to the steel industry. He was prominently identified with the Institution of Mechanical Engineers, of which he was three times President—in 1861, 1862, and 1869. He was president of the British Association at Newcastle-on-Tyne in 1863; Chairman of the Iron and Steel Institute; and President of the Institute of Civil Engineers in 1882. He was a Grand Officer of the Order of San Maurizio e Lazzaro of Italy, Knight Commander of Dannebrog of Denmark, of Charles III. of Spain, and of Francis Joseph of Austria. He was also the recipient of decorations from the rulers of Japan, China, and Siam. His death took place at his residence, Craigside, on the 27th December, 1900.

Lord Armstrong became an Honorary Member of the Institution in 1884.

Members.

John Carter Cameron, eldest son of the Rev. Alexander Cameron, was born at the Manse, Kilchowan, Islay, in the year 1840. He commenced his apprenticeship as an engineer with Messrs Robert Napier & Sons, Glasgow, in 1855, and remained in their employ till 1863, when he accepted an appointment as draughtsman with Messrs Neilson Brothers, Hyde Park Street, Glasgow. After quitting their service he was variously employed at Sunderland, with the Barrow Shipbuilding and Engineering Company, Barrow-in-Furness, and with Messrs Rankin & Blackmore, Port-Glasgow, finally rising to the position of manager with the latter firm, in whose service he gained an extensive experience in the design and construction of machinery for all types of vessels.

Returning to Glasgow he became manager of Messrs William King & Co., and left that establishment in 1900 to start, in conjunction with the late Mr William Mills, the Stanley Engine Works, Kinning Park, under the name of Cameron, Mills, & Coy. The business proved to be very successful, and at his death, which occurred on the 11th August, 1900, Mr Cameron was sole partner.

Mr Cameron became a member of the Institution in 1875.

William Anthony Charlton was born at Newcastle-on-Tyne in 1854, and there he received his education. For a brief period he was engaged with Messrs Brady, manufacturing chemists, of Newcastle, but not caring for the business he entered the service of Messrs Tangye Bros., in the same city, early in 1872, and became manager of the North of England branch of that firm in 1880. He was confirmed in that position when the Tangye establishments were converted into the concern now known as Tangyes, Limited. In the interest of his employers, Mr Charlton made two successive journeys to South Africa during the years 1888 and 1889, the result of his mission leading up to the establishment of Tangyes' large concern in Johannesburg, with branch connections at other centres in South Africa. In 1892 he was transferred to Glasgow, becoming the chief representative of the firm in Scotland, and that post he filled up to the time of his death, which took place on 5th May, 1900.

He took a keen interest in the affairs of the Institution, and, conjointly with Mr Peter Stewart, acted as auditor of the Institution accounts.

Mr Charlton joined the Institution as a member in 1894.

JAMES DONALD was born at Paisley on 3rd December, 1826. He began his engineering career as an apprentice with Messrs Donald & Craig, Paisley, of which firm his father was senior partner. Afrer the demise of his father, Mr Donald was employed for a considerable time in one of the large engineering establishments in Glasgow. Having gained additional experience, he again returned to Paisley as engineer on the works of the Paisley Water Company. In 1851 he became a partner in the firm of Reid & Hanna, iron boat builders and gas engineers, which had been established in Paisley since 1816. On his accession, the constitution of the firm, as well as the title, was entirely changed, and it then became Hanna, Donald, & Wilson, under which name the business of the firm has since been conducted. In 1880 Mr Donald and his three sons became sole partners, and the business has since been wholly in their hands.

During his career, Mr Donald carried out important contracts for hydraulic equipments for slipways, for gasworks plant, and executed several orders for high-speed torpedo craft for the British and Greek Governments. He died at his residence, Riccartsbar, Paisley, on 7th March, 1901, in his seventy-fifth year.

Mr Donald became a member of the Institution in 1864.

THOMAS ELSEE was born at New Mills, Henley-on-Thames, where he spent his boyhood. He was educated at Christ's Hospital, and received his training as an engineer in the works of Messrs Humphreys, Tennant & Dykes, London. On the expiration of his apprenticeship, he went to South America, where he joined his late partner, Mr Saturnino Ribes, in running a small steamer trading up the rivers La Plata, Uruguay, and Parana. Notwithstanding the many revolutions of those early days, their venture was very successful, and they added additional steamers to their trade till they possessed the large fleet trading under the name of the "Mensagerias Fluviales a Vapor del Plata," which was sold to the La Platense Flotilla Co. On the sale of the fleet, Mr Elsee spent some time travelling in the United States, afterwards returning to this country, and in 1890 began shipbuilding at Scotswood-on-Tyne. He, however, built only some three steamers, which were engined by Messrs A. & J. Inglis, when he gave up the business and returned to South America.

He returned to Glasgow in 1896, and placed his last order with Messrs A. & J. Inglis, a firm in whose work he had great confidence, and who altogether built ten steamers to his order, as well as supplying engines to many more. This steamer was named the "Paris," and, on her completion, he went out with her to South America, in 1897. Mr Elsee was a man of reserved habits, and, although most of his time was spent in South America, he was always in touch with modern progress, and showed great judgment in adopting improvements or appliances of real value or merit. He was one of the earliest to adopt steel for shipbuilding. Indeed, the first steamer constructed of steel made by the Steel Co. of Scotland was built to his order.

The steamer "Cosmos," built for him by Messrs A. & J. Inglis in 1879, was the first steamer fitted with the electric light. She was also one of the first to be fitted with hydraulic power for steering gear, cranes, and windlasses. He died at Buenos Aires on 7th November, 1900, aged 62.

He joined the Institution as a member in 1896.

ALLAN GUTHRIE, son of Mr John Guthrie, managing director of Messrs L. Sterne & Co., Glasgow, was born on 25th September, 1873.

He spent the whole of his professional career in the service of Messrs L. Sterne & Co., first as an apprentice, and in later years as their representative north of the Tweed.

Mr Guthrie passed away on 7th August, 1901.

He joined the Institution as an associate in 1898, and became a member two years later.

JOHN HENDERSON, Chairman of Messrs David & William Henderson & Co., Ltd, died on the 20th July, 1900, at his residence in Glasgow. He was one of the best known and most widely esteemed employers on the Clyde. Born 54 years ago; he was the eldest son of the late Mr David Henderson, one of the founders of the firm.

Mr John Henderson was connected with the engineering works of the firm from his youth; and later, when the firm acquired the shipbuilding yard and docks at Meadowside, he became the leading spirit in the management of that department. As a shipbuilder, he was noted for his care and faithfulness in the execution of all his work, and he was held in high esteem by all who came in contact with him in the course of business. He took a keen interest in yachting, and built a large fleet of famous racing and steam yachts

Although he was in no sense a public man, perhaps none was better known on the Clyde, while by his very wide circle of friends he was held in close affection. For some months he had not been well, and he took a trip to Norway in the hope that rest and change might restore him to his usual good health; but while there his illness took a serious development, and he was brought home to procure the best advice. His malady was, however, pronounced incurable, and he died after three weeks' illness.

Mr Henderson was a J.P. for Lanarkshire, Fellow of the Royal Society of Edinburgh, a member of the Institution of Naval Architects, and he was also on the Committee of the British Corporation for the Registry of Shipping, having been connected with it since its inception.

Mr Henderson joined the Institution as a member in 1879.

Hugh M'Intyre was born in Glasgow in 1840, and served his apprenticeship as a carpenter in the shipyard of Messrs Barclay, Curle & Co. Later he became chief draughtsman with Messrs Charles Connell & Co., and subsequently entered the service of Messrs Hamilton, Port-Glasgow, in which firm his brother James was a partner. He left Port-Glasgow to fill the post of manager with Messrs Thomas Wingate & Co., Whiteinch, and remained in that capacity till 1867, when he commenced shipbuilding in Paisley in partnership with Mr D. R. M'Brayne. In 1885 he started as a consulting engineer and naval architect in Glasgow, but relinquished that business to take up shipbuilding at Alloa. In this he was unsuccessful, and in 1897 he returned to Glasgow, where he devoted his time and energies principally to salvage work.

It was while engaged in the salving operations of the s.s. "Corinthia" at Cape Gravois, Hayti, that he contracted malarial fever, which ended in his death at Kingston, Jamaica, on 15th June, 1901.

Mr M'Intyre became a member of the Institution in 1887.

Sir Andrew Maclean was born at Paisley in 1828, and received his education at the High School there. When about seventeen years of age, he entered the service of Messrs Barclay, Curle, & Co., shipbuilders and engineers, as junior clerk, and rose step by step until he became chairman. He was connected with the firm for fifty-five years, and had been associated as colleague with such well-known Clydeside men as Mr Barclay, Mr Curle, Mr Archibald Gilchrist, Mr James Hamilton, and Mr John Ferguson. His province lay more especially in the commercial side of the firm's business, and in financial matters his judgment was held in high regard by his co-partners and colleagues in the municipal life of Partick. He was Provost of that burgh for nine years, and convener of the Finance Committee. In 1887 he was knighted, and in December, 1895, he celebrated the jubilee of his connection with Messrs Barclay, Curle, & Co., on which occasion he was presented with an address and silver casket by his co-directors, officials, and foremen. Sir Andrew was universally esteemed for his kindly disposition and his evident desire to be just in his dealings with all men. He died at his residence, Viewfield, Partick, on the 14th November, 1900, in the 72nd year of his age.

He joined the Institution as a member in 1865.

JOSEPH MOORE was born at Tranent in 1829, and received such education as that neighbourhood afforded. At the age of fifteen he moved to Glasgow to serve an apprenticeship as an engineer. In 1849 he went to San Francisco, where he followed the engineering profession, and through the application of his great natural ability was instrumental in assisting in the development of the resources of a new country. His recognised position as the foremost engineer of California for a period of over 35 years caused him to apply himself to a great variety of work, including engineering in practically all its branches. It may be mentioned that the first cable railway was developed by him, as was also the use of sheet iron pipe, and machinery for making the same, for water works and mining purposes. He invented many new appliances for utilizing the power of water in connection with mines, and introduced improvements in the machinery for extracting the juice from cane, and making the same into sugar.

Being of a modest and retiring disposition, his work was done quietly and without self assertion, so that only those with whom he was engaged realized his manly qualities and engineering ability. Unfortunately, through illness caused by overwork, Mr Moore was obliged to retire from business in 1883, and since then he lived a quiet life principally in this country.

During the session 1881-82 he read a paper on "Hydraulic Machinery for Deep Mining," for which he was awarded the Institution Gold Medal.

He died at London on 31st March, 1901, in his 72nd year.

Mr Moore became a member of the Institution in 1883.

ANDREW STEWART was born at Johnstone in 1832, his parents removing to Glasgow in 1839. He commenced his business career with Messrs Crichton & Eadie, tubemakers, London Lane, Glasgow, in 1849, with whom he remained until 1861, when he founded a modest little tube works in St. Enoch Wynd, Glasgow, on a portion of the site now occupied by the hotel and station of the Glasgow and South Western Railway Company. That little establishment, known as the Clyde Tube Works, has passed away, but has developed a concern of eight large works covering eighty-five acres of ground, and employing upwards of 6000 people. The advancement of the firm was steady from the commencement, and it has undergone a progressive evolution. In 1867 Mr Stewart decided to lay down new works in order to meet the growing needs of his business. A site in close touch with the coal and iron fields of Lanarkshire was deemed advisable, and such a position for the works, also styled the Clyde Tube Works, was found in Coatbridge. In this undertaking Mr Stewart was joined by his brother James, the style of the firm being changed to that of Messrs Andrew and James Stewart. Fifteen years later the business was turned into a private Limited Company, for the purpose of giving a permanent interest and share of benefits to the principal heads of departments, whose part in the building up of the business the Messrs Stewart fully acknowledged and wished thus to recognise, the shareholders being composed entirely of those actively employed in the business. The results of this conversion were that progress and expansion became more rapid, and shortly afterwards the Company acquired the Sun Tube Works, Coatbridge, the lands surrounding the Clyde Works having been fully occupied and built upon, and at about the same time the Clyde Pipe Foundry in Glasgow was absorbed. Later the British Tube Works were built by Mr J. G. Stewart and Mr T. C. Stewart, sons of Mr Andrew Stewart, and in 1890 these Works and the Clydesdale Iron and Steel Works, of Mossend, were amalgamated with Andrew and James Stewart, Ltd., and the whole turned into a public Limited Company, under the style of A. & J. Stewart & Clydesdale, Ltd. In 1898 another big development took place when the business of Messrs James Menzies & Co., of Rutherglen, was taken over, the style of the firm being changed to A. & J. Stewart & Menzies. In 1900 the Imperial Tube Works at Airdrie were erected, and on an adjacent site the Climax Engineering Works for the manufacture of the machines and tools required by the Company in its various Works were recently started. To illustrate their power of production it may be stated that the firm could send out 378 miles of common gas piping per week without drawing from their stores.

Mr Stewart took an active part in philanthropic and educational movements He took a keen interest in the Royal Caledonian Asylum, and in the Royal Scottish Hospital, both institutions in London for the assistance of Scots and their families. In Glasgow, he was a director of the Maternity Hospital and the Old Men's Society, as well as a manager of the Royal Infirmary. His name, however, will be perpetuated chiefly in academic circles as the founder of the Adam Smith Chair of Political Economy at the Glasgow University; and in 1900 its Senatus conferred upon him the honorary degree of LL.D. Mr Stewart had the interests of the Institution warmly at heart, and was a Member of Council for Sessions 1896-97 and 1897-98.

He died at his country mansion of King's Meadows, Peebles, on 16th August, 1901.

Mr Stewart joined the Institution as a member in 1890.

JOHN WILDRIDGE, of Messrs Wildridge & Sinclair, engineers, Sydney, died at Sydney on the 21st July, 1900, after an illness of eight weeks.

Mr Wildridge joined the Institution as a member in 1884.

LIST OF HONORARY MEMBERS, MEMBERS, ASSOCIATES, AND GRADUATES

AT CLOSE OF SESSION 1900-1901.

HONORARY MEMBERS.

	DATE OF ELECTION
KELVIN, Lord, A.M., LL.D., D.C.L., F.R SS.L.. and E. Professor of Natural Philosophy in the University of Glasgow,	1859
BRASSEY, Lord, K.C.B., D.C.L., 4 Great George street, Westminster, London, S.W.,	1891
BLYSTHWOOD, Lord, Blythswood, Renfrewshire,	1891
KENNEDY, Professor A. B. W., LL.D., F.R.S., 17 Victoria street, London, S.W.,	1891
MURRAY, Sir DIGBY, Bart., Hothfield, Parkstone, Dorset,	1891
WHITE, Sir WILLIAM HENRY, K.C.B., F.R.S., LL.D., Admiralty, London,	1894
DURSTON, Sir A. J., K.C.B., Admiralty, London,	1896
FROUDE, R. E., F.R.S., Admiralty Experiment works, Gosport,	1897

MEMBERS.

	DATE OF ELECTION.
AAMUNDSEN, JENS L., 57 Classensgade, 2 Sal, Copenhagen, Denmark,	24 Jan., 1899
ABERCROMBIE, ROBERT GRAHAM, Broad Street Engine Works, Alloa,	21 Mar., 1899
ADAM, J. MILLEN, Ibrox Iron works, Glasgow,	G. 25 Mar., 1890 M. 22 Jan., 1895
ADAMSON, ALEX., 77 Canfield gardens, London, N.W.,	20 Feb., 1900
ADAMSON, JAMES, St. Quivox, Stopford road, Upton Manor, Essex,	23 Apr., 1889
ADAMSON, PETER HOGG, 11 Fairlie park drive, Partick,	19 Mar., 1901
AILSA *(The most Honourable the Marquis of)*, Culzean castle, Maybole,	25 Jan., 1898

Names marked thus * were Members of Scottish Shipbuilders' Association at Incorporation with Institution, 1865.

Names marked thus † are Life Members.

AITCHISON, WILLIAM, 6 Midlothian drive, Shawlands, Glasgow,	22 Oct., 1889
AITKEN, H. WALLACE, 140 Bath Street, Glasgow,	G. 24 Jan., 1888 M. 24 Jan., 1899
AITON, J. ARTHUR, 25 Laurence Pounteney lane, Cannon street, London, E.C.,	24 Nov., 1896
ALEXANDER, JOHN, Engineer, Barrhead,	19 Mar., 1901
ALLAN, JOHN M.,	21 Jan., 1890
ALLAN, ROBERT, Demerara foundry, George Town, Demerara,	30 Apr., 1895
ALLAN ROBERT, 93 Hope Street, Glasgow,	26 Apr., 1898
ALLAN, WILLIAM, M.P., Scotia Engine works, Sunderland,	20 Jan., 1869
ALLEY, STEPHEN E., 8 Woodside terrace, Glasgow,	23 Nov., 1897
†ALLIOTT, JAMES B., The Park, Nottingham,	21 Dec., 1864
ALSTON, WILLIAM M., 24 Sardinia terrace, Hillhead, Glasgow,	G. 15 Feb., 1865 M. 18 Dec., 1877
†AMOS, ALEXANDER, Public Library of N.S.W., Sydney, New South Wales,	21 Dec., 1886
†AMOS, ALEXANDER, Jun.,	21 Dec., 1886
†ANDERSON, E. ANDREW, c/o Clinton, 13 Holmhead street, Glasgow,	21 Feb., 1899
ANDERSON, F. CARLTON, 53 Bothwell street, Glasgow,	23 Apr., 1901
ANDERSON, J. GODFREY, B.SC., c/o Messrs James Templeton & Co., Greenhead, Glasgow,	19 Mar., 1901
ANDERSON, JAMES, 100 Clyde street, Glasgow,	G. 24 Feb., 1874 M. 23 Nov., 1880
ANDERSON, JAMES H., Caledonian Railway, Glasgow,	20 Dec., 1892
ANDERSON, ROBERT, Clyde Street, Renfrew,	26 Jan., 1897
ANDERSON, WILLIAM MARTIN, Engineer, 100 Clyde street, Glasgow,	18 Dec., 1900
ANDERSON, WILLIAM SMITH, Bogie Wood, Port-Glasgow,	21 Nov., 1899
ANDREWS, H. W., 128 Hope street, Glasgow,	A. 21 Dec., 1897 M. 24 Oct., 1899
ANDREWS, JAMES, Holm Foundry, Cathcart,	22 Nov., 1898
ANGUS, ROBERT, Lugar, Ayrshire,	28 Nov., 1860
ANIS, Professor MOHAMED, Bey, Ministère des Travaux Publics, Cairo,	24 Apr., 1894
ARCHER, W. DAVID, 47 Croham road, Croyden, Surrey,	20 Dec., 1887
ARNOT, WILLIAM, 79 West Regent street, Glasgow,	23 Jan., 1894
ARNOTT, HUGH STEELE, Ravenswood, Annfield road, Partick,	G. 26 Oct., 1897 M. 22 Jan., 1901
ARROL, THOMAS A., Germiston works, Glasgow,	21 Dec., 1875
ARROL, THOMAS, Jun., Oswald gardens, Scotstounhill, Glasgow,	20 Nov., 1894

†ARROL, Sir WILLIAM, LL.D., M.P., Dalmarnock Iron works, Glasgow,	27 Jan., 1885
AULD, JOHN, Whitevale foundry, Glasgow,	28 Apr., 1885
AUSTIN, WM. R., 11 University avenue, Glasgow,	23 Feb., 1897

BAILLIE, ROBERT, 3 Kirkwood street, Ibrox,	20 Nov., 1900
BAIN, WILLIAM N., 40 St. Enoch square, Glasgow,	24 Feb., 1880
BAIN, WILLIAM P. C., Lochrin Iron works, Coatbridge,	28 Apr., 1891
BAIRD, ALLAN W., Eastwood villa, St. Andrew's drive, Pollokshields, Glasgow,	25 Oct., 1881
BALDERSTON, JAMES, Anchor mills, Paisley,	25 Jan., 1898
BALDERSTON, JOHN A., Vulcan Works, Paisley,	18 Dec., 1900
BALFOUR, GEORGE, Messrs Lowdon Bros. Temple Electric Works, Dundee,	21 Mar., 1899
BALLINGALL, DAVID, 33 Dudley crescent, Newhaven road, Edinburgh,	27 Oct., 1896
BAMFORD, HARRY, M.Sc., The University, Glasgow,	24 Nov., 1896
BARCLAY, GEORGE, Vulcan works, Paisley,	25 Jan., 1898
BARMAN, HENRY D. D., 27 University avenue, Glasgow,	G. 24 Apr., 1888 M. 24 Oct., 1899
BARNETT, J. R., Westfield, Crookston,	22 Dec., 1896
BARNETT, MICHAEL R., Engineer's Office, Laurel Bank, Lancaster,	22 Nov., 1887
BARR, Professor ARCHIBALD, D.Sc., Royston, Dowanhill, Glasgow,	21 Mar., 1882
BARR, JOHN, Glenfield Company, Kilmarnock,	A. 28 Oct., 1883 M. 25 Jan., 1898
BARROW, JOSEPH, Messrs Thomas Shanks & Co., Johnstone,	19 Feb., 1901
BAXTER, GEORGE H., Clyde Navigation works, Dalmuir,	22 Mar., 1881
BAXTER, P. M'L., Copland works, Govan,	G. 22 Dec., 1885 M. 15 June, 1898
BEARDMORE, JOSEPH, Parkhead Forge, Glasgow,	27 Oct., 1896
BEARDMORE, JOSEPH GEORGE, Parkhead Forge, Glasgow,	22 Nov., 1898
BEARDMORE, WILLIAM, Parkhead forge, Glasgow,	27 Oct., 1896
BEGBIE, WILLIAM, P.O. Box 459, Johannesburg, South Africa,	15 June, 1898
BELL, CHARLES, The Birches, Stirling,	26 Jan., 1875
*†BELL, DAVID, 19 Eton place, Hillhead, Glasgow,	
BELL, IMRIE, 49 Dingwall road, Croydon, Surrey,	23 Mar., 1880
BELL, STUART, 65 Bath street, Glasgow,	26 Feb., 1895

Bell, Thomas, Messrs John Brown & Co., Ltd., Clydebank,	G. 26 Apr., 1887 M. 27 Apr., 1897
Bell, W. Reid, Headquarters, Railway Pioneer Regiment, Johannesburg, South Africa,	22 Jan., 1889
Bennie, H. Osbourne, Clyde Engine works, Cardonald, Glasgow,	25 Jan., 1898
Bennie, John, Auldhousfield, Eastwood, Pollokshaws,	22 Feb., 1898
Bergius, W. C., 77 Queen street, Glasgow,	23 Jan., 1900
Beveridge, Richard James, 53 Waring street, Belfast,	22 Feb., 1898
Biggart, Andrew S., 279 Nithsdale road, Pollokshields, Glasgow,	G. 20 Mar., 1883 M. 25 Nov., 1884
Biles, Professor John Harvard, The University, Glasgow,	25 Mar., 1884
Binney, Wm. H., Marine Superintendent, Holyhead,	26 Jan., 1897
Bird, John R., 10 Morrison street, Glasgow,	25 Mar., 1890
Bishop, Alexander, 8 Germiston street, Glasgow,	G. 24 Mar., 1885 M. 24 Jan., 1899
Black, David, 12 Huntly terrace, Shettleston,	22 Mar., 1898
Blair, David A., Scotland street Copper works, Glasgow,	23 Mar., 1897
Blair, George, B.Sc., 16 Albert road (East), Crosshill, Glasgow,	21 Nov., 1899
Blair, George, Jun., 38 Queen street, Glasgow,	G. 22 Jan., 1884 M. 23 Feb., 1897
Blair, George M'L., 129 Trongate, Glasgow,	17 Feb., 1869
Blair, H. Maclellan, Sentinel works, Polmadie, Glasgow,	G. 22 Jan., 1884 M. 22 Oct., 1889
Blair, James M., Williamcraigs, Linlithgowshire,	27 Mar., 1867
Bone, William L., Ant and Bee works, West Gorton, Manchester,	23 Oct., 1883
Borrowman, William C., Newstead, West Hartlepool,	G. 27 Oct., 1887 M. 26 Oct., 1895
Bost, W. D. Ashton, Adelphi house, Paisley,	25 Jan., 1898
Bow, William, Thistle works Paisley,	27 Jan., 1891
Bowden, George Harland, Oakdene, Woodlesford, near Leeds,	21 Feb., 1899
Bowser, Charles Howard, Charles street, St. Rollox, Glasgow,	21 Mar., 1899
Boyd, William, The Tharsis Sulphur and Copper Co., Ltd., Hebburn-on-Tyne,	24 Oct., 1899
Brace, George R., 25 Water street, Liverpool,	25 Mar., 1890
Bray, E. N., 81 St. George's place, Glasgow,	22 Nov., 1898
Breingan, W. D., Barns place, Clydebank,	22 Jan., 1901
Brewer, J. Alfred, 249 West George street, Glasgow,	20 Nov., 1900
Brier, Henry, 1 Miskin road, Dartford Kent,	22 Dec., 1891

BROADFOOT, JAMES, Lymehurst, Jordanhill,	G. 23 Dec., 1873 M. 22 Jan., 1884
BROADFOOT, WILLIAM R., Inchholm works, Whiteinch,	25 Jan., 1898
BROCK, HENRY W., Engine works, Dumbarton,	30 Apr., 1895
*BROCK, WALTER, Engine works, Dumbarton,	26 Apr., 1865
BROCK, WALTER, Jun., Levenford, Dumbarton,	27 Oct., 1896
BROOM, THOMAS M., Oakfield, East Greenock,	25 Apr., 1893
BROWN, ALEX. D., Dry Dock, St John's, Newfoundland,	22 Dec., 1896
BROWN, ALEXANDER T., 18 Glencairn drive, Pollokshields, Glasgow,	G. 25 Feb., 1879 M. 27 Oct., 1891
*BROWN, ANDREW, London works, Renfrew,	16 Feb., 1859
BROWN, ANDREW M'N., Strathclyde, Dalkeith avenue, Dumbreck, Glasgow,	G. 25 Jan., 1876 M. 24 Nov., 1885
BROWN, EBENEZER HALL-, Helen street Engine works, Govan, Glasgow,	G. 18 Dec., 1883 M. 26 Feb., 1895
BROWN, GEORGE, Kirklee, Dumbarton,	23 Mar., 1886
BROWN, JAMES, Palmer's Shipbuilding Co., Jarrow-on-Tyne,	G. 26 Oct., 1886 M. 26 Jan., 1892
BROWN, JAMES M'N., Glenfruin, Renfrew,	26 Jan., 1897
BROWN, MATTHEW T., B.Sc., 233 St. Vincent street, Glasgow,	G. 25 Jan., 1881 M. 18 Dec., 1894
BROWN, WALTER, Monkdyke, Renfrew,	28 Apr., 1885
BROWN, WILLIAM, Meadowflat, Renfrew,	G. 27 Jan., 1874 M. 22 Jan., 1884
BROWN, WILLIAM, Albion works, Woodville street, Govan, Glasgow,	21 Dec., 1880
BROWN, WILLIAM, Messrs Dubs & Co., Glasgow Locomotive works, Glasgow,	17 Dec., 1889
BROWN, WILLIAM DEWAR, 22 Ranelagh villas, Hove, Sussex,	25 Mar., 1890
BROWN, WILLIAM S., Junr., 67 Washington street, Glasgow,	21 Dec., 1897
BRUCE-KINGSMILL, J., Capt., R.A., The Ordnance College, Woolwich,	21 Dec., 1897
BRUHN, JOHANNES, 49 Sydenham park, Sydenham, London,	G. 24 Oct., 1893 M. 22 Feb., 1898
BRYSON, WILLIAM ALEXANDER, Chambers, 16 Charlotte street, Leith,	27 Oct., 1896
BUCHANAN, JOHN H., 5 Oswald street, Glasgow,	23 Jan., 1900
BUCKWELL, GEORGE W., Board of Trade Offices, Sunderland,	27 Apr., 1897
BUDENBERG, CHRISTIAN FREDERICK, 31 Whitworth street, Manchester,	20 Dec., 1898
BURDEN, ALFRED GEORGE NEWKEY, Messrs Harvey & Co., Box 103, East London, Cape Colony,	20 Feb., 1900
BURT, THOMAS, 60 St. Vincent crescent, Glasgow,	22 Mar., 1881

Butters, Michael W., 20 Waterloo street, Glasgow,	24 Oct., 1899
Butters, James Thomas, Percy Crane & Engine Works, Glasgow,	19 Mar., 1901
Caird, Arthur, Messrs Caird & Co., Ltd., Greenock,	27 Oct., 1896
Caird, Edward B., 777 Commercial road, Limehouse, London,	29 Oct., 1878
†Caird, Patrick T., Messrs Caird & Co., Ltd., Greenock,	27 Oct , 1896
Caird, Robert, LL.D., Messrs Caird & Co., Ltd., Greenock,	20 Feb., 1894
Calderwood, William T., Stanley villa, Kilmailing, Cathcart,	25 Jan., 1898
Caldwell, James, 130 Elliot street, Glasgow,	17 Dec., 1878
Cameron, Donald, City Surveyor's office, Exeter,	25 Feb., 1890
Cameron, John B., 111 Union street, Glasgow,	24 Mar., 1885
Cameron, William, 6 Gordon terrace, Shettleston, Glasgow,	25 Mar., 1890
Campbell, Duncan, Carntyne foundry and Engineering works, Parkhead, Glasgow,	23 Jan., 1900
Campbell, George, Albany villa, Orrell lane, Aintree, Liverpool,	22 Mar., 1898
Campbell, Hugh, The Campbell Gas Engine Company, Halifax, Yorkshire,	18 Dec., 1900
Campbell, James, 104 Bath street, Glasgow,	18 Dec., 1900
Campbell, John, 8 Broomhill drive, Partick,	21 Jan., 1890
†Campbell, Thomas, Maryhill Iron works, Glasgow,	20 Nov., 1900
Campbell, Walter Hope, 42 Krestchatik, Kieff, South Russia,	25 Apr., 1899
Carey, Evelyn G., 4 Sunnyside avenue, Uddingston,	22 Oct., 1889
Carlaw, Alex. L., 11 Finnieston street, Glasgow,	24 Dec., 1895
Carlaw, David, Jun., 11 Finnieston street, Glasgow,	24 Dec., 1895
Carlaw, James W., 11 Finnieston street, Glasgow,	24 Dec., 1895
Carmichael, Angus T., 3 Harvey street, Paisley road, W., Glasgow,	19 Mar , 1901
Carruthers, John H., Ashton, Queen Mary avenue, Crosshill, Glasgow,	22 Nov., 1881
Carver, Thomas, A. B., B.Sc., 118 Napiershall street, Glasgow,	19 Feb., 1901
Chalmers, Walter, 24 Claremont Gardens, Milngavie,	23 Jan., 1900
Chamen, W. A., 75 Waterloo street, Glasgow,	22 Feb., 1898
Christie, John, Corporation Electricity Works, Brighton,	22 Nov., 1898
Christie, R. Barclay, Messrs M'Lay & M'Intyre, 21 Bothwell street, Glasgow,	25 Apr., 1893

Christison, George, 13 Cambridge drive, Glasgow,	22 Feb., 1898
Clark, George Alexander, 34 Ann street, Glasgow,	22 Nov., 1898
Clark, James Lester, 75 Buchanan street, Glasgow,	24 Nov., 1896
Clark, John, British India Steam Navigation Co., 9 Throgmorton avenue, London, E.C.,	23 Jan., 1883
Clark, William, 208 St. Vincent street, Glasgow,	25 Apr., 1893
Clark, William, 88 Renfield street, Glasgow,	22 Dec., 1896
Clark, William Graham, 27 Lawton road, Waterloo, Liverpool,	22 Feb., 1898
Clarkson, Charles, Milner's Safe Co., Ltd., Liverpool,	27 Oct., 1891
Cleghorn, Alexander, 10 Whittinghame drive, Kelvinside, Glasgow,	22 Nov., 1892
Clyne, James, Messrs Clyne, Mitchell, & Co., Commercial road, Aberdeen,	18 Dec., 1900
Coats, Allan, Jun., B.Sc., Hayfield, Paisley,	23 Oct., 1900
Coats, James, Talara, Katharine drive, Govan,	21 Dec., 1897
Cochran, James T., Messrs Cochran & Co., Annan, N.B.,	26 Feb., 1884
Cochrane, John, Grahamston foundry, Barrhead,	25 Mar., 1890
Cockburn, George, Cardonald, near Glasgow,	25 Oct., 1881
Cockburn, Robert, Cumbrae House, Dumbreck, Glasgow,	25 Jan., 1898
Collie, Charles, 19-21 Eaglesham street, Plantation, Glasgow,	26 Apr., 1898
Colville, Archibald, 149 Govan road, Glasgow,	23 Jan., 1900
Colville, Archibald, Motherwell,	27 Oct., 1896
Colville, David, Jerviston house, Motherwell,	27 Oct., 1896
Connell, Charles, Whiteinch, Glasgow,	G. 19 Dec., 1876 M. 25 Mar., 1884
Conner, Alexander, 6 Grange Knowe, Irvine road, Kilmarnock,	G. 26 Feb., 1884 M. 24 Jan., 1899
Conner, Benjamin, 196 St. Vincent street, Glasgow,	G. 22 Dec., 1885 M. 26 Oct., 1897
Conner, James, Lancashire, Derbyshire, and E. Coast Rly., Locomotive Supt.'s Office, Tuxford, Newark,	G 18 Dec., 1877 M. 24 Nov., 1885
Conner, James, Britannia engineering works, Kilmarnock,	20 Nov., 1900
Cooper, James Aberdeen Steam Navigation Company, Aberdeen,	19 Dec., 1893
Cooper, Henry B , Edina Villa, Oban,	19 Feb., 1901
Copeland, James, 24 George square, Glasgow,	17 Feb., 1864
Copestake, S. G. G., Glasgow Locomotive works, Little Govan, Glasgow,	11 Mar., 1868
†Copland, William R., 146 W. Regent street, Glasgow,	20 Jan., 1864
Cormack, John Dewar, B.Sc., The University, Glasgow,	24 Nov., 1896

COULSON, W. ARTHUR, 47 King street, Mile-end, Glasgow,	15 June, 1898
COUPER, SINCLAIR, Moore Park Boiler works, Govan, Glasgow,	G. 21 Dec., 1880 M. 27 Oct., 1891
COURTIER-DUTTON, W. T., Shipbuilder and Engineer, 121 St. Vincent street, Glasgow,	22 Dec., 1896
COUTTS, FRANCIS, 25 Roslin Terrace, Aberdeen.	G. 27 Oct., 1885 M. 24 Jan., 1899
COWAN, DAVID, Clevedon, Cove, Dumbartonshire,	24 Apr., 1900
COWAN, JOHN, 16 Carlton Terrace, Kelvinside, Glasgow,	27 Apr., 1897
COWAN, M'TAGGART, 109 Bath street, Glasgow,	28 Nov., 1866
†COWIE, WILLIAM, 48 Church street, Coatbridge,	20 Feb., 1900
CRAIG, ARCHIBALD FULTON, Belmont, Paisley,	25 Jan., 1898
CRAIG, JAMES, Lloyd's Registry, 14 Cross-shore street, Greenock,	G. 20 Dec., 1892 M. 21 Dec., 1897
CRAIG, JOHN, Broom, Newton Mearns,	22 Jan., 1900
CRAWFORD, JAMES, 30 Ardgowan street, Greenock,	27 Oct., 1896
CRAWFORD, SAMUEL, c/o Garston Graving Dock & Shipbuilding Co., Ltd., Garston, near Liverpool,	18 Dec., 1883
CRICHTON, JAMES L., 3 East Park terrace, Maryhill, Glasgow,	18 Dec., 1894
CROCKATT, WILLIAM, 179 Nithsdale road, Pollokshields, Glasgow,	22 Mar., 1881
CROSHER, JOHN, 87 Portman street, Kinning Park, Glasgow,	24 Jan., 1899
CROSHER, WILLIAM, 31 Great Wellington street, Kinning Park, Glasgow,	24 Jan., 1899
CROW, JOHN, Engineer, 236 Nithsdale road, Pollokshields, Glasgow,	25 Jan., 1898
CRUICKSHANK, J. E., 157 Hope street, Glasgow,	24 Jan., 1899
CUMMING, WM. J. L., Motherwell Bridge Co., Motherwell,	24 Jan., 1899
CUNNINGHAM, PETER N., Easterhouse, Kennyhill, Cumbernauld road, Glasgow,	23 Dec., 1884
CUTHILL, WILLIAM, Beechwood, Uddingston,	24 Nov., 1896

DARROCH, JOHN, 27 South Kinning place, Paisley road, Glasgow,	24 Jan., 1899
DAVIDSON, DAVID, 17 Regent Park square, Strathbungo, Glasgow,	G. 22 Mar., 1881 M. 18 Dec., 1883
DAVIE, JAMES, 92 Albert drive, Crosshill, Glasgow,	19 Dec., 1899
DAVIES, CHARLES M., Leslie house, Pollokshields, Glasgow,	24 Apr., 1900

Davis, Charles H., 99 Cedar street, New York, U.S.A.,	20 Nov., 1900
Davis, Harry Llewelyn, Messrs Cochran & Co., Ltd., Newbie, Annan,	G. 18 Dec., 1888 M. 23 April, 1901
Davison, Thomas, 248 Bath street, Glasgow,	11 Dec., 1861
Delacour, Frank Philip, Baku, Russia,	24 Apr., 1900
Delmaar, Frederick Anthony, Sourabaya, Netherlands East Indies,	G. 24 Apr., 1883 M. 24 Oct., 1899
Dempster, James, 7 Knowe terrace, Pollokshields,	24 Jan., 1899
Dempster, John, 49 Robertson street, Glasgow,	22 Feb., 1898
Denholm, James, 5 Derby terrace, Sandyford street, Glasgow,	21 Nov., 1883
Denholm, William, Meadowside Shipbuilding yard, Partick, Glasgow,	G. 18 Dec., 1883 M. 21 Nov., 1893
Denny, Archibald, Braehead, Dumbarton,	21 Feb., 1888
Denny, James, Engine works, Dumbarton,	25 Oct., 1887
Denny, Col. John M., M.P., Garmoyle, Dumbarton,	27 Oct., 1896
Denny, Leslie, Leven Shipyard, Dumbarton,	30 Apr., 1895
Denny, Peter, Bellfield, Dumbarton,	21 Feb., 1888
Dewrance, John, 165 Great Dover street, London, S.E.,	19 Feb., 1901
Dick, Frank W., c/o The Parkgate Steel & Iron Co., Ltd., Parkgate, Rotherham,	19 Mar., 1878
Dickson, B. Gillespie, c/o J. T. Sellar, 8 Blackfriars street, Perth,	19 Nov., 1890
Dickson, William, Lanarkshire Steel Co., Motherwell,	15 June, 1898
Dimmock, John Wingrave, 2 Grantly gardens, Shawlands, Glasgow,	22 Mar., 1898
Dixon, James S., 127 St. Vincent street, Glasgow,	G. 24 Dec., 1873 M. 22 Jan., 1878
Dixon, Walter, 59 Bath street, Glasgow,	26 Feb., 1895
Dixon, William, H., 59 Bath street, Glasgow,	A. 15 June, 1898 M. 25 Oct., 1898
Dobson, William, The Chesters, Jesmond, Newcastle-on-Tyne,	17 Jan., 1871
Dodd, T. J., Lloyd's Register of Shipping, 342 Argyle street, Glasgow,	20 Nov., 1900
D'Oliveira, Raphael Chrysostome, Campos Rio de Janeiro, Brazil,	20 Feb., 1900
Donald, B. B., 275 Onslow drive, Dennistoun, Glasgow,	G. 20 Mar., 1888 M. 24 Jan., 1899
Donald, David P., Johnstone,	21 Mar., 1899
Donald, Robert Hanna, Abbey works, Paisley,	22 Nov., 1892
Donaldson, James, Almond villa, Renfrew,	25 Jan., 1876
Downie, A. Marshall, London road Iron works, Glasgow,	21 Nov., 1899
Doyle, Patrick, F.R.S.E., 7 Government place, Calcutta, India,	23 Nov., 1886

DREW, ALEXANDER, 22 Rutland square, Edinburgh,	29 Apr., 1890
DRUMMOND, WALTER, The Glasgow Railway Engineering works, Govan, Glasgow,	26 Mar., 1895
DRYSDALE, JOHN W. W., 37 Westercraigs, Dennistoun, Glasgow,	23 Dec., 1884
DUBS, CHARLES R., Glasgow Locomotive works, Glasgow,	24 Oct., 1882
DUNCAN, GEORGE F., 209 Hillhouse gardens, Broomfield road, Springburn, Glasgow,	G. 23 Nov., 1886 M. 20 Mar., 1894
DUNCAN, HUGH, London road Iron works, Glasgow,	15 June, 1898
DUNCAN, JOHN, Ardenclutha, Port-Glasgow,	23 Nov., 1886
DUNCAN, ROBERT, Whitefield Engine works, Govan, Glasgow,	25 Jan., 1881
DUNCAN, ROBERT, Maarowa crescent, Wellington, New Zealand,	24 Oct., 1899
DUNCAN, W. LEES, Partick foundry, Partick, Glasgow,	18 Dec., 1900
DUNLOP, DAVID JOHN, Inch works, Port-Glasgow,	23 Nov., 1869
DUNLOP, JOHN G., Clydebank, Dumbartonshire,	23 Jan., 1877
DUNLOP, THOMAS, 156 Hyndland road, Glasgow,	19 Dec., 1899
DUNLOP, WM. A., Harbour Office, Belfast,	23 April, 1901
DUNLOP, WILLIAM, N. Odero fu Alesso, Sestri Ponento, Italy,	G. 22 Jan., 1884 M. 24 Jan., 1899
DUNN, JAMES, Engineer, Collalis, Scotstounhill, Glasgow,	23 April, 1901
†DUNN, PETER L., 815 Battery street, San Francisco, U.S.A.,	26 Oct., 1886
DYER, HENRY, D. Sc., M. A., 8 Highburgh terrace, Dowanhill, Glasgow,	23 Oct., 1883

EDWARDS, CHARLES, 36 Hamilton park Terrace, Hillhead, Glasgow,	26 Oct., 1897
ELGAR, FRANCIS, LL.D., F.R.SS., L.& E., Fairfield Shipbuilding and Engineering Co., Limited, 113 Cannon street, London, E.C.,	24 Feb., 1885
ELLIOTT, ROBERT, B.Sc., Lloyd's Surveyor, Greenock,	G. 24 Mar., 1885 M. 21 Feb., 1898
EWEN, PETER, The Barrowfield Ironworks, Ltd., Craigielea, Bothwell,	21 Mar., 1899

FAICKNEY, ROBERT, 3 Thornwood terrace, Partick,	20 Nov., 1900
FAIRWEATHER, WALLACE, 62 St. Vincent st., Glasgow,	24 Apr., 1894

FEDDEN, SAMUEL EDGAR, Corporation Electric Supply Department, Commercial street, Sheffield,	21 Mar., 1899
FERGUSON, DANIEL, 27 Oswald street, Glasgow,	26 Apr., 1898
FERGUSON, J. STRATHEARN, 126 Ingleby drive, Dennistoun, Glasgow,	23 Nov., 1897
FERGUSON, JOHN JAMES, Blax-Tulloch, Kirn,	24 Jan., 1899
FERGUSON, PETER, Phœnix works, Paisley,	22 Oct., 1889
FERGUSON, WILFRED H., 4 Thornwood terrace, Partick,	22 Nov., 1898
FERGUSON, WILLIAM D., Albert villa, Ravenhill road, Belfast,	G. 27 Jan., 1885 M. 20 Mar., 1894
FERGUSON, WILLIAM R., Messrs Barclay, Curle & Co., Ltd., Whiteinch, Glasgow,	G. 22 Feb., 1881 M. 22 Jan., 1895
FERRIER, JAMES, c/o Miss Scott, Brax Villa, The Links, Carnoustie,	22 Dec., 1896
FIELDEN, IMMER, Thornton villa, 420 Holderness road, Hull,	24 Feb., 1874
FINDLAY, ALEXANDER, Parkneuk Iron works, Motherwell,	27 Jan., 1880
FINLAYSON, FINLAY, Laird street, Coatbridge,	23 Dec., 1884
FISHER, ANDREW, St. Mirren's Engine works, Paisley,	25 Jan., 1898
FLEMING, ANDREW E., Kandy, Ceylon,	23 Jan., 1894
FLEMING, GEORGE E., Messrs Dewrance & Co., 163 St. Vincent street, Glasgow,	27 Oct., 1896
FLEMING, JOHN, Dellburn works, Motherwell,	24 Jan., 1899
FLEMING, WILLIAM, 10 Heathfield terrace, Springburn Glasgow,	25 Jan., 1898
FLETCHER, JAMES, 15 Kildonan terrace, Paisley road, Ibrox, Glasgow,	G. 28 Jan., 1896 M. 23 Nov., 1897
FLETT, GEORGE L., 5 Abercromby terrace, Ibrox, Glasgow,	22 Jan., 1895
FORSYTH, LAWSON, 97 St. James road, Glasgow,	18 Dec., 1883
FOSTER, JAMES, 11 St. Andrew's drive, Pollokshields, Glasgow,	26 Jan., 1897
FOULIS, WILLIAM, City Chambers, John Street, Glasgow,	18 Jan., 1870
FOX, SAMSON, Grove House, Harrogate,	2 Nov., 1880
FRAME, JAMES, 6 Kilmailing terrace, Cathcart, Glasgow,	23 Feb., 1897
FRASER, WILLIAM, 121 North Montrose street, Glasgow,	19 Dec., 1893
FRYER, TOM J., "Brookdean" Hope, Sheffield,	G. 18 Dec., 1894 M. 20 Dec., 1898
FUJII, JERUGORS, c/o Admiralty, Tokio, Japan,	21 Feb., 1899
FULLERTON, ALEX., Vulcan Works, Paisley,	22 Dec., 1896
FULLERTON, JAMES, Abbotsburn, Paisley,	19 Mar., 1901
FULLERTON ROBERT A., 32 St. Vincent crescent, Glasgow,	19 Mar., 1901
FULTON, NORMAN O., Woodbank, Mt. Vernon, Glasgow,	G. 23 Feb., 1892 M. 19 Mar., 1901

GALE, EDMUND WILLIAM, De Beers Explosive Works, Somerset West, near Cape Town, South Africa,	23 Nov., 1897
†GALE, JAS. M., Corporation Water works, City Chambers, Glasgow,	24 Nov., 1858
GALE, WILLIAM M., 18 Huntly gardens, Kelvinside, Glasgow,	24 Jan., 1893
GALLETLY, ARCHIBALD A., 10 Greenlaw avenue, Paisley,	22 Jan., 1901
GALLOWAY, CHARLES S., Greenwood City, Vancouver, B.C.,	22 Jan., 1895
GARDNER, WALTER, 8 Percy street, Ibrox, Glasgow,	20 Dec., 1898
GEARING, ERNEST, Fenshurst, Clarence drive, Harrogate,	20 Mar., 1888
GEMMELL, E. W., Board of Trade Offices, 7 York street, Glasgow,	18 Dec., 1888
GEMMELL, THOMAS, Electric Lighting Department, St. Enoch Station, Glasgow,	24 Oct., 1899
GIBB, ANDREW, Garthland, Westcombe Park road, Blackheath, London, S.E.,	G. 23 Dec., 1873 M. 21 Mar., 1882
GIFFORD, PATERSON, 101 St. Vincent street, Glasgow,	23 Nov., 1886
GILCHRIST, JAMES, Stobcross Engine works, Finnieston quay, Glasgow,	G. 26 Dec., 1866 M. 29 Oct., 1878
GILLESPIE, ANDREW, 65 Bath street, Glasgow,	20 Nov., 1894
GILLESPIE, JAMES, 21 Minerva street, Glasgow,	G. 24 Feb., 1874 M. 24 Mar., 1891
GILLESPIE, JAMES, Jun., Margaretville, Orchard street, Motherwell,	18 Dec., 1900
GILMOUR, JOHN H., River Bank, Irvine,	20 Feb., 1900
GLASGOW, JAMES, Fernlea, Paisley,	25 Jan., 1898
†GOODWIN, GILBERT S., Alexandra buildings, James street, Liverpool,	28 Mar., 1866
GORDON, A. G., c/o Messrs Shewan, Tomes, & Co., Hongkong, China,	23 April, 1901
GORDON, JOHN, 152 Craigpark street, Glasgow,	26 Mar., 1895
GORRIE, JAMES M., 1 Broomhill terrace, Partick, Glasgow,	22 Nov., 1898
GOSLIN, ERNEST T., 16 Eton place, Hillhead, Glasgow,	20 Nov., 1900
GOURLAY, H. GARRET, Dundee foundry, Dundee,	25 Apr., 1882
GOVAN, ALEXANDER, The Sheiling, Craigendoran,	24 Oct., 1899
GOW, GEORGE, Bellevue road, Mount Eden, Auckland, New Zealand,	20 Mar., 1900
GOWAN, A. B., 27 South Hamilton street, Kilmarnock,	G. 24 Jan., 1882 M. 22 Jan., 1895
GRACIE, ALEX., Fairfield Shipbuilding and Engineering Company, Govan,	G. 26 Feb., 1884 M. 24 Nov., 1896
GRAHAM, DAVID R., Messrs A. Stephen & Sons, Engine Department, Linthouse, Glasgow,	25 Apr., 1893

Graham, John, 60 Cambridge drive, Kelvinside, Glasgow,	25 Jan., 1898
Graham, John, 25 Broomhill terrace, Partick,	23 Oct., 1900
Graham, Walter, Kilblain Engine works, Nicholson street, Greenock,	G. 28 Jan., 1896 M. 15 June, 1898
Grant, Thomas M., 222 St. Vincent street, Glasgow,	25 Jan., 1876
Gray, David, 77 West Nile street, Glasgow,	21 Nov., 1899
Gray, James, Riverside, Old Cumnock, Ayrshire,	8 Jan., 1862
Gray, William, 2 Veir terrace, Dumbarton,	23 Feb., 1897
Gretchin, G. L., 10 Tschernomorskaia street, Odessa, Russia,	25 Jan., 1898
Grieve, John, Engineer, Motherwell,	25 Jan., 1898
Groves, L. John, Engineer, Crinan Canal, Ardrishaig,	20 Dec., 1881
Guthrie, John, The Crown Iron works, Glasgow,	27 Oct., 1896

Haig, Robert, The Mechanical Retorts Co., Limited Murray street, Paisley,	22 Jan., 1901
Haigh, William R., 6 Elmwood gardens, Jordanhill,	22 Dec., 1896
Halket, James P., Glengall Iron works, Millwall, London, E.,	26 Oct., 1897
Hall, William, Shipbuilder, Aberdeen,	25 Jan., 1881
Halley, William Lizars, Lennoxlea, Dumbarton,	21 Dec., 1897
Hamilton, Archibald, Clyde Navigation Chambers, Glasgow,	G. 24 Feb., 1874 M. 24 Nov., 1885
Hamilton, Claud, 247 St. Vincent street, Glasgow,	15 June, 1898
Hamilton, David C., Clyde Shipping Company, 21 Carlton place, Glasgow,	G. 23 Dec., 1873 M. 22 Nov., 1881
Hamilton, James, Messrs William Beardmore & Co., Govan, Glasgow,	G. 26 Dec., 1863 M. 18 Mar., 1876
Hamilton, James, 6 Kyle park, Uddingston,	20 Nov., 1900
*Hamilton, John, 22 Athole gardens, Glasgow,	
Hamilton, John K., 53 Waterloo street, Glasgow,	15 May, 1900
Hamilton, W. D., 116 St. Vincent street, Glasgow,	21 Mar., 1899
Hand, Henry, Lloyd's Register, 342 Argyle street, Glasgow,	22 Jan., 1901
Harman, Bruce, 35 Connaught road, Harlenden, London, N.W.,	G. 2 Nov., 1880 M. 22 Jan., 1884
Harrison, J. E., 160 Hope street, Glasgow,	G. 26 Feb., 1889 M. 22 Feb., 1898
Hart, P. Campbell, John Finnie street, Kilmarnock,	24 Nov., 1896
Harvey, James, 224 West street, Glasgow,	24 Jan., 1899

HARVEY, JOHN H., Messrs Wm. Hamilton & Co , Port-Glasgow,	22 Feb., 1887
HARVEY, ROBERT, 224 West street, Glasgow,	24 Nov., 1896
HARVEY, THOMAS, Grangemouth Dockyard Co., Grangemouth,	19 Dec., 1899
HASTIE, WILLIAM, Kilblain Engine works, Greenock,	17 Jan., 1871
HAY, RANKIN, 44 Windsor terrace, St. George's road, Glasgow,	18 Dec., 1900
HAYWARD, THOMAS ANDREW, 18 Carrington street, Glasgow,	22 Mar., 1898
†HENDERSON, A. P., 30 Lancefield quay, Glasgow,	25 Nov., 1879
HENDERSON, FREDERICK N., Meadowside, Partick, Glasgow,	26 Mar., 1895
HENDERSON, J. BAILIE, Government Hydraulic Engineer, Brisbane, Queensland,	18 Dec., 1888
HENDERSON, JAMES BLACKLOCK, D.Sc., 250 Byars road, Glasgow,	20 Nov., 1900
†HENDERSON, JOHN L.,	25 Nov., 1879
HENDERSON, ROBERT, 777 London road, Glasgow,	19 Mar., 1901
HENDERSON, WILLIAM STEWART, Belwood, Coatbridge,	24 Nov., 1896
HENDRY, JAMES C., 8 Fleming terrace, George street, Shettleston,	18 Dec., 1900
HENRY, ERENTZ, 13 Ann street, Hillhead, Glasgow,	20 Feb., 1900
HERRIOT, GEORGE, 24 Moray place, Strathbungo, Glasgow,	20 Feb., 1877
HERRIOT, W. SCOTT, 19 Keir street, Pollokshields, Glasgow,	28 Oct., 1890
HETHERINGTON, EDWARD P., Messrs John Hetherington & Co, Ltd., Pollard street, Manchester,	22 Nov., 1892
HIDE, WILLIAM SEYMOUR, Messrs Amos & Smith, Albert Dock works, Hull,	18 Dec., 1888
HILL, THOMAS, Inzievar, Newlands, Langside, Glasgow,	22 Jan., 1895
HINES, JAMES, Dunedin lodge, Lenzie, Glasgow,	28 Jan., 1896
HODGART, JOHN, Lumsburn, Paisley,	22 Dec., 1896
HOGARTH, W. A., 293 Onslow drive, Glasgow,	20 Nov., 1900
HOGG, CHARLES P., 53 Bothwell street, Glasgow,	2 Nov., 1880
HOGG, JOHN, Victoria Engine works, Airdrie,	20 Mar., 1883
HOLLIS, H. E., 40 Union street, Glasgow,	A. 20 Nov., 1897 M. 24 Oct., 1899
HOLMES, F. G., Town Hall, Govan,	23 Mar., 1880
HOLMES, MATTHEW, Netherby, Lenzie,	20 Mar., 1883
HOLMS, A. CAMPBELL, Lloyd's Register, 56 John street, Sunderland,	24 Apr., 1894
HOMAN, WILLIAM M'L., c/o D. M'Call, Esq., 10 Rosslyn terrace, Kelvinside, Glasgow,	G. 26 Jan., 1892 M. 26 Oct., 1897

Home, Henry, 208 St. Vincent street, Glasgow,	23 Feb., 1897
Horne, George S., 18 Berkeley terrace, Glasgow,	21 Feb., 1899
Horne, John, Rokeby villa, Carlisle,	23 Nov., 1897
†Houston, Colin, Harbour Engine works, 60 Portman street, Glasgow,	25 Mar., 1890
Houston, James, Junr., Brisbane house, Bellahouston,	25 Jan., 1898
Howard, John Rowland, Parkside place, Johnstone,	18 Dec., 1900
Howat, William, 21 Kirkland street, Glasgow,	22 Feb., 1898
†Howden, James, 195 Scotland street, Glasgow,	Original
Hubbard, Robert Sowter, 3 Downie place, Crow road, Partick,	19 Dec., 1899
Hume, James Howden, 195 Scotland street, Glasgow,	22 Dec., 1891
Hummel, Horace James Jordan, c/o Pintsch's Patent Lighting Co., 38 Leadenhall street, London, E.C.,	23 April, 1901
*†Hunt, Edmund, 121 West George street, Glasgow,	Original
Hunter, Gilbert M., Newyards, Maybole, Ayr,	G. 26 Oct., 1886 M. 19 Nov., 1889
Hunter, James, Aberdeen Iron works, Aberdeen,	25 Jan., 1881
Hunter, James, 34 Ancaster drive, Glasgow, W.,	20 Feb., 1900
Hunter, John, 13 Queen's Gate, Dowanhill, Glasgow,	A. 22 Jan., 1895 M. 21 Mar. 1899
Hunter, Joseph Gilbert, 29 Regent quay, Aberdeen,	24 Feb., 1891
Hunter, Matthew, Burnbank, Whiteinch,	19 Mar., 1901
Hutcheon, James, 46 Park drive south, Whiteinch,	19 Mar., 1901
Hutcheson, Arch., 37 Mair street, Plantation, Glasgow,	22 Dec., 1896
Hutcheson, John, 37 Mair street, Plantation, Glasgow,	22 Mar., 1898
Hutchison, James H., Shipbuilder, Port-Glasgow,	26 Mar., 1895
Hutchison, John S., 126 Bothwell street, Glasgow,	24 Apr., 1900
Hutson, Alexander, Westbourne house, Kelvinside, Glasgow,	19 Dec., 1899
Hutson, Guybon, Kelvinhaugh Engine works, Glasgow,	G. 23 Dec., 1873 M. 24 Nov., 1885
Hutson, Guybon, Junr., 3 Bute mansions Glasgow,	21 Mar., 1893
Hutson, James, 117 Balshagray avenue, Partick,	19 Dec., 1899

†Inglis, John, LL.D., Point House Shipyard, Glasgow,	1 May, 1861
Ireland, William, 7 Ardgowan terrace, Glasgow,	25 Feb., 1890

Jack, Alexander, 164 Windmillhill, Motherwell	21 Nov., 1893

JACK, JAMES R., Mavisbank, Dumbarton,		27 Apr., 1897
JACKSON, DANIEL, Thornbank, Dumbarton,		24 Oct., 1899
JACKSON, HAROLD D., Westdel, Dowanhill, Glasgow,	G. M.	24 Mar., 1891 20 Dec., 1898
JACKSON, PETER, 109 Hope street, Glasgow,		24 Mar., 1891
JACKSON, WILLIAM, Govan Engine works, Govan, Glasgow,		21 Dec., 1875
JAMIESON, Professor ANDREW, F.R.S.E., 16 Rosslyn terrace, Kelvinside, Glasgow,		26 Mar., 1889
JARDINE, JOHN, 8 Courtland terrace, Port Talbot, Glamorgan,		26 April, 1898
JEFF, WILLIAM, 55 Brandon street, Motherwell,		18 Dec., 1900
JEFFERY, ARTHUR W., 71 Dixon Avenue, Glasgow,		23 April, 1901
JOHNSTON, DAVID, 9 Osborne terrace, Copland road, Glasgow,		25 Feb., 1879
JOHNSTON, ROBERT, Kirklee, Wallace street, Kilmarnock,		22 Mar., 1898
JOHNSTONE, GEORGE, Marine Superintendent, British India Steam Navigation Co., Ltd., 16 Strand road, Calcutta,		21 Mar., 1899
JONES, LLEWELLYN, Chesterfield house, 98 Great Tower street, London, E.C.,		25 Oct., 1892

KEEGAN, THOMAS J., 41 Margaret street, Greenock,		22 Jan., 1901
KEELING, THOMAS, 42 Prospecthill road, Langside, Glasgow,		19 Feb., 1901
KELLY, ALEXANDER, 100 Hyde Park street, Glasgow,		28 Feb., 1897
KEMP, DANIEL, 129 Kenmure street, Pollokshields, Glasgow,	G. M.	23 Nov., 1886 20 Dec., 1898
KEMP, EBENEZER, D., Birkenhead Iron works, Birkenhead,	G. M.	20 Feb., 1883 25 Oct., 1892
KEMPT, IRVINE, Jun., Foresthill, Kelvinside, Glasgow,	G. M.	26 Feb., 1895 27 Apr., 1897
KENNEDY, ALEXANDER M'A., Rosslea, Dumbarton,		30 Apr., 1895
KENNEDY, JOHN, Messrs R. M'Andrew & Co., Suffolk House, Laurence Pountney Hill, London, E.C.,		23 Jan., 1877
KENNEDY, ROBT., B.Sc., Messrs Glenfield & Kennedy, Kilmarnock,		23 Mar., 1897
KENNEDY, THOMAS, Messrs Glenfield & Kennedy, Kilmarnock,		22 Feb., 1876
KENNEDY, WILLIAM, 13 Victoria crescent, Dowanhill, Glasgow,		24 Apr., 1894
KERR, JAMES, Lloyd's Register of Shipping, Hull,		22 Feb., 1898

KEY, WILLIAM, 109 Hope street, Glasgow,	20 Feb., 1900
KINCAID, JOHN G., 30 Forsyth street, Greenock,	22 Feb., 1898
KING, A. C., Motherwell Bridge Co., Motherwell,	24 Jan., 1899
KING, DONALD, 1 Montgomerie cottages, Scotstoun, Glasgow,	G. 21 Dec., 1886 M. 20 Mar., 1894
KING, J. FOSTER, The British Corporation, 121 St. Vincent street, Glasgow,	26 Mar., 1895
KINGHORN, A. J., 59 Robertson street, Glasgow,	24 Oct., 1899
KINGHORN, JOHN G., Tower Buildings, Water street, Liverpool,	23 Dec., 1879
KINMONT, DAVID W., Contractor's Office, Larkhall,	G. 20 Feb., 1894 M. 19 Mar., 1901
†KIRBY, FRANK E., Detroit, U.S.A.,	24 Nov., 1885
KNIGHT, CHARLES A., c/o Messrs Babcock & Wilcox, Ltd., Oriel House, Farringdon st., London, E.C.,	27 Jan., 1885
KNOX, ROBERT, 10 Clayton terrace, Dennistoun, Glasgow,	24 Nov., 1896
KREBS, FREDERICK, 22 Amaliegade, Cophenhagen,	23 Mar., 1880

LACKIE, WILLIAM W., 75 Waterloo street, Glasgow,	22 Nov., 1898
LADE, JAMES A., 7 Rue Lagrange, Bordeaux, France,	27 Jan., 1891
LAIDLAW, JOHN, 98 Dundas street, S.S., Glasgow,	25 Mar., 1884
LAIDLAW, ROBERT, 147 East Milton street, Glasgow,	26 Nov., 1862
LAING, ANDREW, The Wallsend Slipway Company, Newcastle-on-Tyne,	20 Mar., 1880
LAIRD, ANDREW, 190 West George Street, Glasgow,	22 Nov., 1898
LAMBERT, JOHN, Corporation Electricity Works, Perth,	18 Dec., 1900
LAMBERTON, ANDREW, Sunnyside Engine works, Coatbridge,	27 Apr., 1897
LAMBIE, ALEXANDER, Ravenshall, Port-Glasgow,	19 Mar., 1901
LANG, C. R., Holm Foundry, Cathcart, Glasgow,	G. 20 Nov., 1888 M. 26 Nov., 1895
LANG, JAMES, Messrs George Smith & Sons, City Line, 75 Bothwell street, Glasgow,	24 Feb., 1880
LANG, JOHN, Jun., Lynnhurst, Johnstone,	26 Feb., 1884
LANG, ROBERT, Quarrypark, Johnstone,	25 Jan., 1898
LAURENCE, GEORGE B., Clutha Iron works, Paisley road, Glasgow,	21 Feb., 1888
LAWS, BERNARD COURTNEY, c/o Messrs Sir Raylton Dixon & Co., Ltd., Middlesbrough-on-Tees,	26 Oct., 1897
LE ROSSIGNOL, A. E., Corporation Tramway Office, City road, Newcastle-on-Tyne,	22 Nov., 1898

Lee, Harrison Wm., Hampden Residential Club, Phœnix street, London, N.W.,	25 Apr., 1899
†Lee, Robert, The Whiteinch Galvanizing Co., Ltd., Harmsworth street, Whiteinch,	G. 21 Dec., 1886 M. 22 Mar., 1898
Leitch, Arch., 40 St. Enoch square, Glasgow,	22 Dec., 1896
Lemkes, C. R. L., 5 Wellington street, Glasgow,	A. 26 Feb., 1884 M. 22 Mar., 1898
Lennox, Alexander, 34 Glasgow street, Hillhead, Glasgow,	G. 23 Jan., 1894 M. 19 Mar., 1901
Leslie, James T. G., 148 Randolph terrace, Hill street, Garnethill, Glasgow,	25 Apr., 1893
Leslie, William, Resident Engineer, Coolgardie Water Scheme, Resident Engineer's Office, Mundaring, West Australia,	24 Feb., 1891
Lester, William R., 11 West Regent street, Glasgow,	G. 21 Nov., 1883 M. 24 Jan., 1899
Lewin, Harry W., 154 West Regent street, Glasgow,	20 Dec., 1898
†Lindsay, Charles C., 217 W. George street, Glasgow,	G. 23 Dec., 1873 M. 24 Oct., 1876
Lindsay, W. F., 203 Nithsdale road, Pollokshields, Glasgow,	19 Mar., 1901
Lithgow, William T., Port-Glasgow,	21 Feb., 1893
Livesey, Robt. M., c/o Messrs Topham Jones & Railton, H.M. Dockyard Extension, Gibraltar,	26 Jan., 1897
†Lobnitz, Fred., Clarence house, Renfrew,	G. 24 Mar., 1885 M. 20 Nov., 1896
Lockie, John, Wh.Sc., 2 Custom House Chambers, Leith,	26 Jan., 1897
Lonergan, Alfred E., Whitefield Engine works, Govan, Glasgow,	17 Dec., 1889
Longbottom, John Gordon, Technical College, 38 Bath street, Glasgow,	22 Nov., 1898
†Lorimer, William, Glasgow Locomotive works, Gushetfaulds, Glasgow,	27 Oct., 1896
†Loudon, George Findlay, 10 Claremont Terrace, Glasgow,	25 Jan., 1896
Luke, W. J., Messrs John Brown & Co., Ltd., Clydebank,	24 Jan., 1898
Lusk, Hugh D., c/o Mrs Nelson, Larch villa, Annan,	21 Feb., 1880
Lusk, James, 7 Claremont terrace, Glasgow,	18 Dec., 1905
Lyall, John, 34 Randolph gardens, Partick,	27 Oct., 1888

Macalpine, John H., Viewfield, Kilmalcolm,	20 Dec., 1898
M'Arthur, James D., Oriental avenue, Bangkok, Siam,	26 Apr., 1898
McAulay, W., 34 Ann street, Glasgow,	22 Nov., 1898

†M‘Call, David, 160 Hope street, Glasgow,	17 Feb., 1858
M‘Callum, H. Malcolm, c/o Mrs Craighead, 191 Kilmarnock road, Shawlands, Glasgow,	24 Oct., 1899
M‘Coll, Peter, 284 Dumbarton road, Partick,	G. 18 Dec., 1883 M. 24 Jan., 1899
†MacColl, Hector, Bloomfield, Belfast,	24 Mar., 1874
MacColl, Hugo, Wreath Quay Engineering works, Sunderland,	G. 20 Dec., 1881 M. 22 Oct., 1889
M‘Creath, James, 208 St. Vincent street, Glasgow,	23 Oct., 1883
M‘Culloch, Frank. c/o Messrs William Watson & Co., 7 Waterloo place, Pall Mall, London, S.W.,	27 Jan., 1891
Macdonald, D. H., Brandon works, Motherwell,	21 Mar., 1896
Macdonald, John, 146 West Regent street, Glasgow,	21 Mar., 1899
Macdonald, John Dron, 3 Rosemount terrace, Ibrox, Glasgow,	19 Mar., 1901
Macdonald, Thomas, 9 York street, Glasgow,	25 Jan., 1898
M‘Dougall, Robert Melvin, 86 Dale street, Glasgow,	20 Nov., 1900
M‘Dowall, H. J., Johnstone,	21 Mar., 1899
M‘Ewan, James, Cyclops Foundry Co., Whiteinch, Glasgow,	26 Feb., 1884
M‘Ewan, Joseph, 35 Houldsworth street, Glasgow,	27 Jan., 1891
Macfarlane, James W., 12 Balmoral villas, Cathcart, Glasgow,	2 Nov., 1880
Macfarlane, James, Anniesleа, Motherwell,	15 June, 1898
Macfarlane, Walter, 22 Park Circus, Glasgow,	26 Oct., 1886
M‘Farlane, George, 34 West George street, Glasgow,	G. 24 Feb., 1874 M. 24 Nov., 1885
M‘Farlane, Hugh,	21 Feb., 1899
Macfee, John, Castle Chambers, West Regent street, Glasgow,	22 Jan., 1901
M‘Gee, David, The Cottage, Clydebank,	22 Dec., 1896
†M‘Gee, Walter, Stoney brae, Paisley.	25 Jan., 1898
M‘Geoch, David Boyd, Lilybank, Port-Glasgow,	28 Jan., 1896
M‘Gibbon, W. C., 2 Carlton Court, Bridge st., Glasgow,	18 Dec., 1900
MacGregor, J. Grant, Office of Chief Engineer, Hamilton & Dayton Railway Co., Cincinnati, U.S.A.	G. 21 Dec., 1886 M. 28 Apr., 1891
M‘Gregor, John B., 19 Bell street, Renfrew,	G. 18 Dec., 1883 M. 27 Apr., 1897
M‘Gregor, Thomas, 10 Mosesfield terrace, Springburn, Glasgow,	26 Jan., 1886
M‘Ilvenna, John, 13 Caird drive, Partickhill, Glasgow,	19 Mar., 1901
M‘Indoe, John B., Scottish House to House Electricity Co., Coatbridge,	21 Mar., 1899
M‘Intosh, Donald, Dunglass, Bowling,	20 Feb., 1894

M'INTOSH, JOHN F., Caledonian Railway, St. Rollox, Glasgow,	28 Jan., 1896
MACKAY, ROBERT, 7 Leslie st., Pollokshields, Glasgow,	23 Jan., 1900
M'KEAND, ALLAN, 1 St. James terrace, Hillhead, Glasgow,	G. 19 Dec., 1882 M. 20 Mar., 1894
MACKECHNIE, JOHN, 342 Argyle street, Glasgow,	20 Dec., 1898
M'KECHNIE, JAMES, Messrs Vickers, Sons, & Maxim, Barrow-in-Furness,	24 Apr., 1888
MACKENZIE, JAMES, 8 St. Alban's road, Bootle,	G. 25 Oct., 1881 M. 24 Jan., 1899
MACKENZIE, THOMAS B., 342 Duke street, Glasgow,	G. 23 Jan., 1885 M. 26 Nov., 1893
M'KENZIE, JOHN, Messrs J. Gardiner & Co., 24 St Vincent place, Glasgow,	25 Apr., 1893
M'KENZIE, JOHN, Speedwell Engineering works, Coatbridge,	25 Jan., 1898
MACKIE, WILLIAM A., Falkland bank, Partickhill, Glasgow,	22 Mar., 1881
M'KIE, J. A., Copland works, Govan,	25 Jan., 1898
†MACKINLAY, JAMES T. C., 110 Gt. Wellington street, Kinning park, Glasgow,	27 Oct., 1896
M'KINNEL, WILLIAM, 234 Nithsdale road, Pollokshields, Glasgow,	A. 21 Feb., 1893 M. 22 Feb., 1898
MACKINNON, James D., 93 Hope street, Glasgow.	24 Nov., 1896
M'LACHLAN, EWEN, 4 Abbotsford place, Glasgow,	21 Feb., 1899
M'LACHLAN, JOHN, Saucel Bank House, Paisley,	26 Oct., 1897
M'LAREN, THOMAS, 342 Argyle street, Glasgow,	20 Dec., 1898
MACLAREN, JOHN F., B.Sc., Eglinton foundry, Canal street, Glasgow,	23 Feb., 1892
MACLAREN, ROBERT, Eglinton foundry, Canal street, Glasgow,	G. 2 Nov., 1880 M. 22 Dec., 1885
MCLAREN, JOHN ALEX., 34 Ann street, Glasgow,	22 Nov., 1898
MCLAURIN, DUNCAN, Cartside, Milliken park, Renfrewshire,	23 Oct., 1900
MACLAY, Prof. ALEX., B.Sc., Camptower, Bearsden,	28 Apr., 1891
MACLAY, DAVID M., Dunourne, Douglas street, Motherwell,	18 Dec., 1900
MACLEAN, MAGNUS, D.Sc., Prof., Technical College, 38 Bath street, Glasgow,	21 Nov., 1899
MACLEAN, WILLIAM DICK, 3 Weymouth terrace, Cessnock, Glasgow,	25 Jan., 1898
M'LELLAN, ARCHIBALD, Carron Co., Carron, Stirlingshire,	25 Apr., 1899
†MACLELLAN, WILLIAM T., Clutha Iron works, Glasgow,	21 Dec., 1886
MCLELLAN, DUGALD, Caledonian Railway, 2 Oswald street, Glasgow,	22 Jan., 1901

M'MASTER, ROBERT, Linthouse, Glasgow,		25 Feb., 1890
M'MILLAN, JOHN, Corporation Electric Light Station, Dewar Place, Edinburgh,	G. M.	27 Jan., 1885 24 Jan., 1899
M'MILLAN, W. MACLEOD, Dockyard, Dumbarton,		22 Jan., 1901
MACMILLAN, HUGH MILLAR, B.Sc., Messrs Wigham, Richardson, & Co., Newcastle-on-Tyne,		18 Dec., 1900
*†**MACMILLAN, WILLIAM**, Holmwood, Whittinghame drive, Kelvinside, Glasgow,		
McMURRAY, THOMAS H., Rosetta avenue, Belfast,		22 Jan., 1901
M'NAIR, JAMES, Norwood, Prestwick road, Ayr,		26 Nov., 1895
M'NEIL, JOHN, Helen street, Govan, Glasgow,		23 Dec., 1884
MACNICOLL, NICOL, 6 Dixon street, Glasgow,		19 Mar., 1901
MACOUAT, R. B., Victoria Bolt and Rivet works, Cranstonhill, Glasgow,		21 Mar., 1899
MACPHERSON, JOHN, 128 Hope street, Glasgow,		20 Nov., 1894
MACRAE, NORMAN, Northern Gold Fields Company, Salisbury, Mashonaland, South Africa,		26 Nov., 1895
M'WHIRTER, WILLIAM, 214 Holm street, Glasgow,		24 Mar., 1891
MACK, JAMES, 22 Rutland street, Edinburgh,	G. M.	21 Dec., 1886 20 Dec., 1898
MANSON, JAMES, G. & S. W. Railway, Kilmarnock,		21 Feb., 1899
MARR, JAMES BROWN, c/o Messrs Kirkland & Capper, 17 Victoria street, Westminster, London, S.W.,		21 Dec., 1897
MARRIOTT, REUBEN, Plantation Boiler Works, Govan,		23 Feb., 1897
MARSHALL, DAVID, Glasgow Tube works, Glasgow,		22 Jan., 1895
MARSHALL, JOHN, Ashgrove, Kilwinning,		18 Dec., 1900
MARTIN, E. L., 122 Leadenhall street, London, E.C.,		27 Oct., 1896
MATHEWSON, GEORGE, Bothwell works, Dunfermline,		21 Dec., 1875
MATHEWSON, ROBERT C., Glenburn Iron works, Greenock,		22 Jan., 1895
MATHIESON, DONALD A., 3 Germiston street, Glasgow,		26 Jan., 1897
MATTHEY, C. A., c/o W. Hope Campbell, Esq., 42 Krestchatik, Kieff, S. Russia,		26 Oct., 1897
MAVOR, HENRY A., 47 King street, Bridgeton, Glasgow,		22 Apr., 1884
MAVOR, SAM, 37 Burnbank gardens, Glasgow,		20 Nov., 1894
MAXTON, JAMES, 4 Ulster street, Belfast,		22 Jan., 1901
MAY, WILLIAM W., Woodbourne, Minard avenue, Partickhill, Glasgow,		25 Jan., 1876
MAYER, WM., Morwell House, Dumbarton,		23 Feb., 1897
MECHAN, HENRY, 13 Montgomerie quadrant, Glasgow,		25 Jan., 1887
MECHAN, SAMUEL, 5 Kelvingrove terrace, Glasgow,		27 Oct., 1891
MELDRUM, JAMES, 10 Victoria street, Westminster, London, S.W.,	G. M.	24 Oct., 1876 28 Nov., 1882

MELVILLE, WILLIAM, Glasgow and South Western Railway, St. Enoch square, Glasgow,	23 Jan., 1883
MIDDLETON, R. A., Northumberland Shipbuilding Co., Howdon-on-Tyne,	G. 24 Jan., 1882 M. 28 Oct., 1890
MILLAR, SIDNEY, Harthill house, Cambuslang,	G. 26 Feb., 1889 M. 21 Dec., 1897
MILLAR, WILLIAM, Sunnyside, Grangemouth,	19 Dec., 1899
MILLER, ARTHUR C., 12 Caird drive, Partickhill, Glasgow,	19 Mar., 1901
MILLER, JOHN F., Greenoakhill, Broomhouse,	G. 23 Dec., 1873 M. 22 Nov., 1881
MILNE, GEORGE, 10 Bothwell street, Glasgow,	22 Jan., 1901
MINTY, WILLIAM, 40 Gilnow road, Bolton, Lancashire,	25 Apr., 1899
†MIRRLEES, JAMES B., 45 Scotland street, Glasgow,	Original
MITCHELL, ALEXANDER, Hayfield house, Springburn, Glasgow,	26 Jan., 1886
MITCHELL, GEORGE A., F.R.S.E., 5 West Regent street, Glasgow,	25 Jan., 1898
MITCHELL, THOMAS, Gower street, Bellahouston, Glasgow,	20 Nov., 1888
MOIR, ERNEST W., c/o Messrs S. Pearson & Son. 10 Victoria street, Westminster, London,	G. 25 Jan., 1881 M. 24 Jan., 1899
MOIR, JOHN, Clyde Shipbuilding and Engineering Company, Port-Glasgow,	23 Feb., 1897
MOIR, THOMAS, 10 Syrian terrace, Springburn, Glasgow,	23 Apr., 1901
MÖLLER, W., 102 Bath street, Glasgow,	22 Jan., 1901
MOLLISON, HECTOR A., 30 Balshagray avenue, Partick,	G. 22 Nov., 1892 M. 20 Nov., 1900
MOLLISON, JAMES, 30 Balshagray avenue, Partick,	21 Mar., 1876
MOORE, RALPH D., B.Sc., 13 Clairmont gardens, Glasgow,	27 Apr., 1897
MOORE, ROBERT T., B.Sc., 13 Clairmont gardens, Glasgow,	27 Jan., 1891
MORISON, WILLIAM, 41 St. Vincent crescent, Glasgow,	20 Mar., 1888
MORISON, WILLIAM B., 7 Rowallan gardens, Broomhill, Glasgow,	20 Nov., 1900
MORRISON, WILLIAM, 11 Sherbrooke avenue, Pollokshields,	19 Feb., 1901
MORRICE, RICHARD WOOD, 24 Battlefield road. Langside, Glasgow,	23 Feb., 1897
MORT, ARTHUR, Ellenslea, Wilson street, Motherwell,	G. 26 Jan., 1897 M. 19 Dec., 1899
MORTON, DAVID HOME, 130 Bath street, Glasgow,	20 Nov., 1900
MORTON, DUNCAN A., Errol works, Errol,	21 Nov., 1899
MORTON, ROBERT, 237 West George street, Glasgow,	G. 17 Dec., 1878 M. 23 Jan., 1883
MOTION, ROBERT, Ladywell, Motherwell,	23 Feb., 1892

MOTT, EDMUND, 7 York street, Glasgow,	24 Mar., 1885
†MUIR, ALFRED, Sherbourne street, Manchester,	23 Feb., 1897
†MUIR, HUGH, 7 Kelvingrove terrace, Glasgow,	17 Feb., 1864
MUIR, JAMES E., 45 West Nile street, Glasgow,	22 Dec., 1896
†MUIR, JOHN G.,	24 Jan., 1882
MUIR, ROBERT WHITE, 97 St. James road, Glasgow,	21 Dec., 1897
MUIRHEAD, JAMES A., Natal Government Agency, 26 Victoria street, Westminster, London, S.W.,	19 Feb., 1901
MUIRHEAD, WILLIAM, 37 West George street, Glasgow,	26 Oct., 1897
MUMME, CARL, 30 Newark street, Greenock,	22 Oct., 1895
MUMME, ERNEST CHAS., Hajipur-Begam Sarai Railway Extension, Begam Sarai P.O., Tirhoot State Railway, India,	G. 22 Nov., 1892 M. 20 Feb., 1900
MUNN, ROBERT A., Messrs Donald Currie & Co., Engineer's Department, Southampton,	22 Dec., 1896
MUNRO, JOHN, 7 Ibrox place, Govan,	23 Apr., 1901
MUNRO, ROBERT D., Scottish Boiler Insurance Company, 111 Union street, Glasgow,	19 Dec., 1882
MURDOCH, FREDERICK TEED, Nile House, Mansourah, Egypt,	25 Feb., 1896
MURDOCH, J. A., 7 Park Circus place, Glasgow,	G. 25 Oct., 1892 M. 20 Nov., 1900
MURPHY, B. STEWART, Lloyd's Surveyor, 342 Argyle street, Glasgow,	G. 24 Oct., 1893 M. 20 Nov., 1900
MURRAY, ANGUS, Strathroy, Dumbreck,	G. 14 May, 1878 M. 19 Nov., 1889
MURRAY, HENRY, Shipbuilder, Port-Glasgow,	22 Dec., 1896
MURRAY, JAMES, Westfield, Port-Glasgow,	22 Dec., 1896
MURRAY, JAMES, 94 Washington street, Glasgow,	26 Jan., 1886
MURRAY, RICHARD, 109 Hope street, Glasgow,	26 Oct., 1897
MURRAY, THOMAS BLACKWOOD, B.Sc., 3 Clarence drive, Kelvinside, Glasgow,	22 Dec., 1891
MURRAY, THOMAS R., Messrs. Spencer & Co., Melksham, Wilts,	25 Feb., 1896
MYLES, DAVID, Northumberland Engine works, Wallsend-on-Tyne,	G. 20 Dec., 1887 M. 19 Dec., 1899

NAPIER, HENRY M., Shipbuilder, Yoker, near Glasgow,	25 Jan., 1881
†NAPIER, ROBERT T., 75 Bothwell street, Glasgow,	20 Dec., 1881
NEILSON, JAMES, Ironmaster, Mossend,	23 Mar., 1897
NELSON, ANDREW S., Snowdon, Sherbrooke avenue, Pollokshields, Glasgow,	27 Oct., 1896

NESS, GEORGE, 128a Queen Victoria street, London, E.C.,	23 Feb., 1897
NICOL, R. GORDON, 15 Regent Quay, Aberdeen,	20 Nov., 1900
NISH, WILLIAM, c/o W. L. C. Paterson, Esq., Finnieston Quay, Glasgow,	6 Apr., 1887
NORMAN, JOHN, 131a St. Vincent street, Glasgow,	11 Dec., 1861

O'BRIEN, WILLIAM, 21 Ibrox terrace, Govan,	27 Jan., 1891
O'NEILL, J. J., 14 West Princes street, Glasgow,	24 Nov., 1896
OLDFIELD, GEORGE, Atlas Works, Springburn,	22 Nov., 1898
OLIPHANT, WM., Belvidere, 10 Kay park terrace, Kilmarnock,	23 Feb., 1897
†ORMISTON, JOHN W., Douglas gardens, Uddingston,	28 Nov., 1860
ORR, ALEXANDER T., Marine Department, London and North-Western Railway, Holyhead,	24 Mar., 1883
ORR, JOHN R., Motherwell Bridge Co., Motherwell,	24 Jan., 1899

PAASCH, HEINRICH, 27 Rue d'Amsterdam, Antwerp,	28 Oct., 1890
PATERSON, JOHN, Edradour, Dalmuir,	22 Jan., 1901
PATERSON, W. L. C., 5 Elmwood terrace, Jordanhill, Glasgow,	21 Nov., 1883
PATTERSON, JAMES, Maryhill Iron works, Glasgow,	22 Nov., 1898
PATON, ALEXANDER R., Redthorn, Partick,	G. 25 Nov., 1879 M. 20 Nov., 1894
PATON, Professor GEORGE, Royal Agricultural College, Cirencester,	22 Nov., 1887
PATON, JOHN, 57 Bath street Glasgow,	26 Feb., 1889
PATRICK, ANDREW CRAWFORD, Johnstone,	25 Jan., 1898
PATTERSON, JAMES, 130 Elliot street, Glasgow,	18 Dec., 1900
PATTIE, ALEXANDER W., Hong Kong & Whampoa Dock Co., Hong Kong,	22 Jan., 1895
PAUL, ANDREW, Levenford works, Dumbarton,	24 Apr., 1877
PAUL, H. S., Levenford works, Dumbarton,	24 Jan., 1899
PAUL, MATTHEW, Levenford works, Dumbarton,	G. 26 Feb., 1884 M. 21 Dec., 1886
PEACOCK, JAMES, Oriental Steam Navigation Co., 13 Fenchurch Avenue, London, E.C.	G. 22 Nov., 1881 M. 21 Feb., 1899
PEAT, JAMES D., Finnieston quay, Glasgow,	18 Dec., 1894

PECK, EDWARD C., Messrs Yarrow & Company, Poplar, London,	G. 23 Dec., 1873 M. 23 Oct., 1888
PECK, JAMES J., 9 Broomhill gardens, Partick, Glasgow,	22 Dec., 1896
PECK, NOEL E., Newington, Southbrae drive, Scotstounhill, Glasgow,	18 Dec., 1900
PENMAN, ROBERT REID, 16 Annfield place, Glasgow,	25 Jan., 1898
PENMAN, WILLIAM, Springfield house, Dalmarnock, Glasgow,	25 Jan., 1898
PETROFF, ALEXANDER, 60 Thornton avenue, Streatham Hill, London, S.W.,	19 Mar., 1901
PHILIP, WILLIAM LITTLEJOHN, 7 Sherbrooke avenue, Pollokshields, Glasgow	24 Jan., 1899
PHILP, WILLIAM T., Messrs Workman Clark & Co., Ltd., Belfast,	G. 25 Oct., 1881 M. 27 Oct., 1891
PICKERING, ROBERT YOUNG, Railway Wagon and Wheel works, Wishaw,	24 Nov., 1896
PLUMMER, W. E., Soho works, Bradford,	19 Mar., 1901
POOLE, WILLIAM JOHN, 19 Waverley park, Shawlands, Glasgow,	20 Dec., 1898
POLLOCK, DAVID, 128 Hope street, Glasgow,	23 Feb., 1897
POLLOK, ROBT., Craiglea, Dumbarton,	22 Dec., 1896
POPE, ROBERT BAND, Leven Shipyard, Dumbarton,	25 Oct., 1887
PRATTEN, WILLIAM J., Mornington, Derryvolgie avenue, Belfast,	22 Dec., 1896
PURDON, ARCHIBALD, Inch works, Port-Glasgow,	27 Apr., 1897
PURVES, J. A., D.Sc., F.R.S.E., 53 York place, Edinburgh,	25 Oct., 1898
PURVIS, F. P., Strathleven place, Dumbarton,	20 Nov., 1877
PUTNAM, THOMAS, Darlington Forge Co., Darlington,	15 June, 1898
PYLE, JAMES H., 88 Elliot street, Glasgow,	23 Feb., 1897

RAEBURN, CHARLES E., 1 Hillhead street, W., Glasgow,	24 Oct., 1899
RAINEY, FRANCIS E., c/o Mr F. Nell, 97 Queen Victoria street, London, S.E.,	27 Apr., 1897
RAIT, HENRY M., 155 Fenchurch street, London,	23 Dec., 1868
RAMAGE, RICHARD, Shipbuilder, Leith,	22 Apr., 1873
RAMSAY, CHARLES, 33 Thurlby road, West Norwood, London,	21 Dec., 1897
RANKIN, JOHN F., Eagle foundry, Greenock,	23 Mar., 1886
RANKIN, MATTHEW, Messrs Rankin & Demas, Engineers, Smyrna,	G. 2 Nov., 1880 M. 20 Mar., 1894
RANKIN, ROBT., Jun., 6 Brighton place, Govan,	22 Jan., 1901
RANKINE, DAVID, 238 West George street, Glasgow,	22 Oct., 1872

Reed-Cooper, T. L., 12 Queen's terrace, Glasgow,	22 Dec., 1896
Reid, Andrew T., Hydepark Locomotive works, Glasgow,	G. 21 Dec., 1886 M. 18 Dec., 1894
Reid, Charles, Lilymount, Kilmarnock,	25 Jan., 1881
Reid, George W., Locomotive Department, Natal Government Railways, Durban, Natal, S. Africa,	21 Nov., 1883
Reid, J. Miller, 110 Lancefield street, Glasgow,	23 Mar., 1897
Reid, James, Shipbuilder, Port-Glasgow,	17 Mar., 1869
Reid, James, 3 Cart street, Paisley,	25 Jan., 1898
†Reid, James B., Chapelhill, Paisley,	24 Nov., 1891
Reid, James G., 58 West Regent street, Glasgow,	G. 23 Dec., 1894 M. 21 Feb., 1899
†Reid, John, 5 Montague terrace, Kelvinside, Glasgow,	G. 21 Dec., 1886 M. 18 Dec., 1894
Reid, John, Glendune, Port-Glasgow,	18 Dec., 1900
Reid, Robert Shaw, 161 Hope street, Glasgow,	21 Mar., 1899
Reid, Thomas, Jun., 6 Bridge street, Abbey, Paisley,	18 Dec., 1900
Rew, James H., Ardfern, Victoria place, Airdrie,	27 Oct., 1896
Reynolds, Charles H., Sir W. G. Armstrong, Mitchell & Co., Walker Shipyard, Newcastle-on-Tyne,	G. 23 Dec., 1873 M. 22 Nov., 1881
Richards, T. J., 7 York street, Glasgow,	19 Mar., 1901
Richmond, Sir David, North British Tube works, Govan,	21 Dec., 1897
Richmond, James, 24 Sutherland terrace, Hillhead, Glasgow,	G. 23 Jan., 1894 M. 23 Oct., 1900
Richmond, John R., Holm foundry, Cathcart, Glasgow,	28 Jan., 1896
Riddell, W. G., 155 Hyndland road, Glasgow,	21 Feb., 1899
Risk, Robert, Halidon Villa, Cambuslang,	23 Mar., 1897
Ritchie, George, Parkhead Forge, Glasgow,	15 June, 1898
Robb, James W., 15 Huntly terrace, Shettleston,	25 Mar., 1890
Robertson, A. W., The Shipyard, Ardrossan,	18 Dec., 1900
Robertson, Alex., Jun., Forgemaster, Kilmarnock,	22 Dec., 1896
Robertson, Andrew R., 8 Park Circus place, Glasgow,	G. 12 Nov., 1892 M. 23 Feb., 1897
Robertson, Duncan, Baldroma, Ibrox, Glasgow,	24 Oct., 1876
Robertson, Robert, B.Sc., 154 West George street, Glasgow,	20 Nov., 1900
Robertson, Thomas, 13 Broomhill avenue, Glasgow,	23 Jan., 1900
Robertson, William, 141 St. Vincent street, Glasgow,	25 Nov., 1863
Robin, Matthew, 15 Clifford street, Glasgow,	G. 20 Dec., 1887 M. 25 Jan., 1898
Robinson, J. F., Atlas works, Springburn, Glasgow,	24 Apr., 1858
Robson, George J., 22 Bath street, Glasgow,	21 Mar., 1899
*†Robson, Hazelton R., 14 Royal crescent, Glasgow,	Original

RODGER, ANDERSON, Glenpark, Port-Glasgow,	21 Mar., 1893
ROGER, GEORGE WM., Shipyard, Irvine,	G. 24 Nov., 1896 M. 18 Dec., 1900
ROSENTHAL, JAMES H., 147 Queen Victoria street, London, E.C.,	24 Nov., 1896
ROSS, J. MACEWAN, Ardenlea, Lenzie,	G. 28 Nov., 1882 M. 27 Oct., 1891
ROSS, JAMES R., 7 Ashfield gardens, Jordanhill, Glasgow,	24 Nov., 1896
ROSS, RICHARD G., 21 Greenhead street, Glasgow,	11 Dec., 1861
ROSS, WILLIAM, 101 St. Vincent street, Glasgow,	18 Dec., 1900
ROWAN, FREDERICK JOHN, 71A West Nile st., Glasgow,	26 Jan., 1892
ROWAN, JAMES, 231 Elliot street, Glasgow,	G. 21 Dec., 1875 M. 27 Jan., 1885
ROWLEY, THOMAS, Board of Trade Offices, Virginia street, Greenock,	18 Dec., 1888
RUDD, JOHN A., 177 West George street, Glasgow,	G. 24 Jan., 1888 M. 15 June, 1898
RUSSELL, FREDERICK ALEXANDER, 20 Skirving street, Shawlands, Glasgow,	25 Jan., 1888
†RUSSELL, GEORGE, Alpha Works, Motherwell,	G. 22 Dec., 1858 M. 4 Mar., 1863
†RUSSELL, JAMES, Waverley, Uddingston,	G. 24 Nov., 1891 M. 25 Jan., 1898
RUSSELL, JOSEPH, Shipbuilder, Port-Glasgow,	22 Feb., 1881
RUSSELL, JOSEPH WILLIAM, 50 Charles street, St. Rollox, Glasgow,	G. 6 Apr., 1887 M. 25 Jan., 1898
RUSSELL, THOMAS W., Admiralty, 21 Northumberland avenue, London, W.C.,	27 Apr., 1897
RUTHERFORD, GEORGE, Mercantile Pontoon Company, Cardiff,	23 Mar., 1897

SADLER, HERBERT C., University of Michigan, Ann Arbor, Michigan, U.S.A.	G. 19 Dec., 1893 M. 23 Oct., 1900
SALMON, EDWARD MOWBRAY, 2 White Lion court, Cornhill, London, E.C.,	21 Jan., 1890
SALMOND, HENRY, 93 Hope street, Glasgow,	18 Dec., 1900
SAMPSON, ALEX. W., Bonnington, 9 Beech avenue, Bellahouston,	22 Dec., 1896
SAMSON, PETER, Board of Trade Offices, 54 Victoria street, Westminster, London, S.W.,	24 Oct., 1876
SAMUEL, JAMES, Jun., 185 Kent road, Glasgow,	24 Feb., 1885
SANDERSON, JOHN, Lloyd's Register, Royal Exchange, Middlesbro'-on-Tees,	20 Feb., 1883

SAYERS, WILLIAM BROOKS, Glenwood, Bearsden,		25 Oct., 1892
†SCOBIE, JOHN, Box No. 93, Chief Resident Engineer, S.L.G. Ry. Extension, Freetown, West Coast of Africa,	G. M.	25 Mar., 1879 23 Oct., 1888
SCOTT, CHARLES CUNNINGHAM, Greenock Foundry, Greenock,		27 Oct., 1896
SCOTT, CHARLES WOOD, Dunarbuck, Bowling,		15 June, 1898
SCOTT, JAMES, Rock Knowe, Tayport, N.B.		22 Dec., 1896
SCOTT, JAMES, Jun., Strathclyde, Bowling,		15 June, 1898
SCOTT, JAMES E., 52 Coal Exchange, London,		30 Jan., 1872
SCOTT, JAMES G., 34 Montague street, Glasgow,		19 Mar., 1901
SCOTT, JOHN, Abden works, Kinghorn,		25 Jan., 1881
†*SEATH, THOMAS B., 42 Broomielaw, Glasgow,		28 Nov., 1860
SELBY-BIGGE, D., 27 Mosley street, Newcastle-on-Tyne,		21 Feb., 1899
SEXTON, Professor HUMBOLDT, Glasgow and West of Scotland Technical College, 204 George st., Glasgow,		25 Feb., 1896
SHANKS, ALEXANDER, Jun.,		26 Apr., 1892
SHANKS, JAS. KIRKWOOD, Engineer, Beechfield, Denny,		23 Apr., 1901
SHANKS, WILLIAM, Tubal works, Barrhead,		15 June, 1898
SHARER, EDMUND, Scotstoun house, Scotstoun, Glasgow,		30 Apr., 1895
SHARP, JOHN, 11 Windsor Terrace, Glasgow,	G. M.	24 Oct., 1882 22 Nov., 1898
SHARPE, ROBERT, Corporation Gas-Works, Belfast,		22 Jan., 1901
SHEARER, JOHN, 13 Crown terrace, Dowanhill, Glasgow,		23 Oct., 1900
SHEDDEN, WILLIAM, 3 Andrew's street, Paisley,		24 Oct., 1899
SHEPHERD, JOHN W., Carrickarden, Bearsden,		26 Mar., 1889
SHERIFF, THOS., 17 Westlands drive, Whiteinch, Glasgow,		22 Dec., 1896
SHUTE, ARTHUR E., 12 Clydeview, Partick, Glasgow,		27 Oct., 1896
SHUTE, CHARLES W., 38 Rowallan gardens, Partick, Glasgow,		27 Oct., 1896
SHUTE, T. S., 3 Kensington terrace, South, Sunderland,	G. M.	19 Dec., 1893 22 Feb., 1893
SIME, JOHN, 96 Buchanan street, Glasgow,		26 Jan., 1897
†SIMONS, WILLIAM, Tighnabruaich, Argyleshire,		24 Nov., 1858
SIMPSON, ALEXANDER, 175 Hope street, Glasgow,		22 Jan., 1862
SIMPSON, ROBERT, B.Sc., 175 Hope street, Glasgow,		25 Jan., 1887
SIMPSON, WILLIAM, 15 Regent Quay, Aberdeen,		20 Nov., 1900
SINCLAIR, NISBET, 29 University avenue, Glasgow,	G. M.	20 Mar., 1877 20 Dec., 1887
SLIGHT, GEORGE H., Jun., c/o James Slight, 131 West Regent street, Glasgow,	G. M.	28 Nov., 1882 22 Oct., 1889
SMAIL, DAVID, 19 Waterloo street, Glasgow,		22 Jan., 1901
SMALL, WILLIAM O., Carmyle avenue, Carmyle,		23 Feb., 1897
SMART, LEWIS A., 27 Wind street, Swansea,		22 Mar., 1898

Smillie, Samuel, 71 Lancefield street, Glasgow,	A. 24 Jan., 1888 M. 22 Feb., 1898
Smith, Alexander D., 487 Shields road, Pollokshields, Glasgow,	2 Nov., 1880
Smith, Hugh Wilson, Netherby, N. Albert road, Pollokshields, Glasgow,	25 Jan., 1898
Smith, James, H$^{\text{da.}}$ Bordelaise, Mannabo, Porto Rico,	23 Oct., 1888
Smith, Osbourne, Possil Engine works, Glasgow,	24 Dec., 1895
Smith, Robert, 24 Claremont street, Glasgow,	20 Mar., 1900
Smith, William J., 7 Newark drive, Pollokshields, Glasgow,	24 Jan., 1899
Sneddon, W. R., Shipyard, Irvine,	22 Jan., 1901
Snowball, Edward, 10 Broomfield terrace, Springburn, Glasgow,	22 Feb., 1870
Somervail, Peter A., Dalmuir Ironworks, Dalmuir,	25 Jan., 1887
Somerville, Thomas A., 12 Abbotsford rd,, Galashiels,	22 Feb., 1898
Sproul, A., 34 Union Row, Aberdeen,	19 Mar., 1901
Stark, James, 13 Princes gardens, Dowanhill, Glasgow,	27 Oct., 1896
†Stephen, Alexander E., 8 Princes terrace, Dowanhill, Glasgow,	18 Dec., 1883
†Stephen, Frederick J., Linthouse, Govan,	30 Apr., 1895
Stephen, J. M., 12 Campania place, Govan,	19 Mar., 1901
*†Stephen, John, Linthouse, Govan,	
Steven, James, Eastvale place, Kelvinhaugh, Glasgow,	23 Oct., 1900
Steven, John, Messrs Steven and Struthers, Eastvale place, Kelvinhaugh, Glasgow,	26 Oct., 1897
Steven, John Wilson, 9 Princes terrace, Dowanhill, Glasgow,	20 Dec., 1898
Steven, William, 83 Fellows road, North Hampstead, London, S.W.	23 Jan., 1894
Stevens, John, Ayton, Albert drive, Renfrew,	23 Mar., 1897
Stevenson, Wm. F., Ayrshire Foundry Co., Goulburn, Argyle road, Saltcoats,	18 Dec., 1900
Stewart, Alexander W., Messrs John Brown & Co , Clydebank,	23 Jan., 1894
Stewart, Duncan, 47 Summer street, Glasgow,	30 Jan., 1867
†Stewart, James, Harbour Engine works, 60 Portman street, Glasgow,	25 Mar., 1890
Stewart, James, Messrs L. Sterne & Co., 155 North Woodside road, Glasgow,	25 Oct., 1898
Stewart, John Graham, B.Sc., Bredisholm, Baillieston,	22 Mar., 1892
Stewart, W. Maxwell, 55 W. Regent street, Glasgow,	21 Nov., 1899
Strachan, Robert, 55 Clifford street, Ibrox, Govan,	22 Nov., 1898
Strathern, Alexander G., Hillside, Stepps, N.B.,	25 Apr., 1899

Stuart, James, 115 Wellington street, Glasgow,	22 Oct., 1889
Stuart, James, B.Sc., Stanley villa, Langside, Glasgow,	23 Nov., 1897
Stuart, James Tait, 2 Bowmont terrace, Kelvinside, Glasgow,	18 Dec., 1900
Surtees, Francis Vere, Messrs Lobnitz & Co., Ltd., Renfrew,	19 Feb., 1901
Sutherland, Sinclair, North British Tube works, Govan,	21 Dec., 1897
Syme, James 8 Glenavon terrace, Partick,	23 Jan., 1877

Tannett, John Croysdale, Vulcan works, Paisley,	25 Jan., 1898
Tatham, Stanley, Montana, Burton road, Branksome park, Bournemouth, W.,	G. 21 Dec., 1880 M. 15 June, 1898
Taverner, H. Lacy, 48 West Regent street, Glasgow,	22 Dec., 1896
Taylor, Benson, 22 Hayburn crescent, Partick,	20 Nov., 1900
Taylor, Peter, Benlee, Port-Glasgow,	28 Apr., 1885
Taylor, Robert, 49 Brisbane street, Greenock,	27 Oct., 1896
Taylor, Staveley, Messrs Russell & Company, Shipbuilders, Port-Glasgow,	25 Mar., 1879
Terano, Seiichi, College of Engineering, Imperial University, Tōkyō, Japan,	21 Feb., 1899
Thearle, Samuel J. P., 2 White Lion Court, Cornhill, London,	22 Dec., 1896
Thode, George W., c/o Deutsche, Babcock and Wilcox, Dampftkessel Werke, Actien Geselchaft, Aberhausen Rhld, Germany,	27 Jan., 1885
Thom, John, 5 Westbank quadrant, Hillhead,	26 Feb., 1889
Thomson, Prof. Arthur W., D.Sc., College of Science, Poona, India,	26 Apr., 1887
Thomson, G. Caldwell, 23 Elisabeth street, Riga, Russia,	24 Oct., 1893
Thomson, George, 14 Caird drive, Partickhill, Glasgow,	18 Dec., 1883
Thomson, George, 3 Woodburn terrace, Morningside, Edinburgh,	G. 23 Nov., 1880 M. 20 Nov., 1894
Thomson, George C., 53 Bedford road, Rock Ferry, near Birkenhead,	G. 24 Feb., 1874 M. 22 Oct., 1889
Thomson, George P., 4 Queen's gardens, Dowanhill, Glasgow,	25 Apr., 1882
Thomson, James, M.A., 22 Wentworth place, Newcastle-on-Tyne,	23 Mar., 1886
Thomson, James, Hayfield, Motherwell,	G. 20 Nov., 1894 M. 20 Nov., 1900
Thomson, James M., Glentower, Kelvinside, Glasgow,	12 Feb., 1868

Thomson, James R.,	21 Mar., 1882
Thomson, John, 3 Crown terrace, Dowanhill, Glasgow,	20 May, 1868
Thomson, R. H. B., Govan Shipbuilding yard, Govan, Glasgow,	26 Feb., 1895
Thomson, Robert, Messrs Barr, Thomson & Co, Ltd., Kilmarnock,	25 Jan., 1898
Thomson, W. B., Ellengowan, Dundee,	14 May, 1878
Thomson, Walter M., Inverclyde, Bothwell,	G. 20 Nov., 1894 M. 24 Dec., 1895
Thomson, William, 27 University avenue, Glasgow,	G. 23 Dec., 1884 M. 27 Oct., 1896
Thunderbolt, Edward, 164 Cambridge drive, Kelvinside, Glasgow,	23 Feb., 1897
Tidd, E. George, 25 Gordon street, Glasgow,	22 Oct., 1895
Todd, David R., 39-40 Arcade Chambers, St. Mary's Gate and Dean's Gate, Manchester,	G. 25 Jan., 1887 M. 25 Oct., 1892
Tullis, David K., Kilbowie Iron works, Kilbowie,	23 Nov., 1897
Tullis, James, Kilbowie Iron works, Kilbowie,	23 Nov., 1897
Turnbull, Alexander, St. Mungo's works, Bishopbriggs, Glasgow,	21 Nov., 1876
Turnbull, Alexander Pott, 264 Maxwell road, Pollokshields, Glasgow,	25 Jan., 1898
†**Turnbull, John,** Jun., 190 West George street, Glasgow,	23 Nov., 1875
Turnbull, Wm. George, Hallside Steel works, Newton,	21 Dec., 1897
Turner, Thomas, Caledonia works, Kilmarnock,	22 Jan., 1901

Waddell, James, 15 Moray place, Glasgow,	23 Mar., 1897
Walker, John, 1 Church road, Ibrox, Glasgow,	G. 20 Nov., 1894 M. 19 Dec., 1899
Wallace, Duncan M., 65 Union street, Greenock,	27 Oct., 1896
Wallace, John, Jun., 123 East Princes street, Helensburgh,	G. 26 Jan., 1892 M. 22 Jan., 1901
Wallace, Peter, Ailsa Shipbuilding Co., Troon,	23 Jan., 1883
Wallace, W. Carlile, Atlas Steel and Iron works, Sheffield,	24 Mar., 1885
Ward, J. C. A., 75 Waterloo street, Glasgow,	22 Nov., 1898
Ward, John, Leven Shipyard, Dumbarton,	26 Jan., 1886
Warde, Henry W., 71 Waterloo street, Glasgow,	15 June, 1898
Warden, Willoughby C., 25 Gordon street, Glasgow,	24 Mar., 1896
Warren, Thos. Samuel, Lloyd's Register, 342 Argyle street, Glasgow,	22 Jan., 1901

WATKINSON, Prof. W. H., The Pines, Crookston,		19 Dec., 1893
WATSON, G. L., 53 Bothwell street, Glasgow,		23 Mar., 1875
WATSON, WILLIAM, Clyde Shipping Company, Greenock,		24 Nov., 1896
WATT, ALEXANDER, Inchcape, Paisley,		25 Jan., 1898
WEBB, R. G., Messrs Richardson & Cruddas, Byculla, Bombay,	G. M.	21 Dec., 1875 26 Oct., 1886
WEBSTER, JAMES, Messrs Sharp, Stewart, & Co., Ltd., Atlas works, Springburn, Glasgow,		21 Mar., 1899
WEBSTER, THOMAS LAWSON, 11 Stuart street, Shawlands, Glasgow,		21 Nov., 1899
WEDDELL, JAS., Park villa, Uddingston,		22 Dec., 1896
WEDGEWOOD, A., Jun., Dennystown Forge, Dumbarton,		18 Dec., 1900
WEDGWOOD, ARTHUR D., Forgemaster, Dumbarton,		26 Jan., 1897
WEIGHTON, Prof. R. L., M.A., Durham College of Science, Newcastle-on-Tyne,	G. M.	17 Dec., 1878 22 Nov., 1887
†WEIR, GEORGE, Yass, near Sydney, New South Wales,		22 Dec., 1874
†WEIR, JAMES, Holmwood, 72 St. Andrew's drive, Pollokshields, Glasgow,		22 Dec., 1874
WEIR, JOHN, c/o Messrs D. & W. Henderson & Co., Ltd., 190 Elliot street, Glasgow,	G. M.	22 Apr., 1884 26 Nov., 1895
†WEIR, THOMAS, China Merchants' Steam Navigation Co., Marine Superintendent's Office, Shanghai, China,		23 Apr., 1889
WEIR, THOMAS D., Messrs Brown, Mair, Gemmill & Hyslop, 162 St. Vincent street, Glasgow,	G. M.	19 Dec., 1876 26 Feb., 1884
WEIR, WILLIAM, Holm foundry, Cathcart, Glasgow,	G. M.	28 Jan., 1896 22 Nov., 1898
WEIR, WILLIAM, 231 Elliot street, Glasgow,		22 Jan., 1901
WELSH, JAMES, 3 Princes gardens, Dowanhill, Glasgow,	G. M.	24 Nov., 1885 26 Oct., 1897
WELSH, Thomas M., 3 Princes gardens, Dowanhill, Glasgow,		17 Feb., 1869
WEMYSS, GEORGE B., 57 Elliot street, Hillhead, Glasgow,	G. M.	28 Nov., 1882 22 Jan., 1901
WEST, HENRY H., 5 Castle street, Liverpool,		23 Dec., 1868
WHITE, RICHARD S., Shirley, Jesmond, Newcastle-on-Tyne,		20 Feb., 1883
WHITEHEAD, JAMES, 6 Buchanan terrace, Paisley,		6 Apr., 1887
WILLIAMS, LLEWELLYN WYNN, B.Sc., Cathcart, Glasgow,		22 Feb., 1898
WILLIAMS, OWEN R., B.Sc., Railway Appliance works, Cathcart, Glasgow,		20 Nov., 1900
WILLIAMS, WILLIAM, Grand Hotel, Glasgow,		23 Jan., 1900
WILLIAMSON, ALEXANDER, 67 Esplanade, Greenock,		21 Mar., 1899
WILLIAMSON, Sir JAMES, Whitehall, London, S.W.,		23 Dec., 1884
WILLIAMSON, JAMES, Marine Superintendent, Gourock,		24 Mar., 1896

WILLIAMSON, ROBERT, Brithdir works, Alexandra docks, Newport, Mon.,	20 Feb., 1883
WILSON, ALEXANDER, Dawsholm Gasworks, Maryhill, Glasgow,	28 Jan., 1896
WILSON, ALEXANDER, Hyde Park Foundry, Finnieston street, Glasgow,	23 Feb., 1897
WILSON, ALEX. HALL, B.Sc., Messrs Hall, Russell, & Co., Aberdeen,	23 Oct., 1900
WILSON, DAVID, Arecibo, Porto Rico, West Indies,	25 Oct., 1887
WILSON, GAVIN, 107 Pollok street, S.S., Glasgow,	22 Oct., 1889
†WILSON, JOHN, 165 Onslow drive, Dennistoun, Glasgow,	22 Feb., 1870
WILSON, JOHN, 101 Leadenhall street, London, E.C.,	24 Dec., 1895
WILSON, W.H., 34 Maxwell drive, Pollokshields, Glasgow,	22 Feb., 1898
WILSON, WILLIAM, Lilybank Boiler works, Glasgow,	30 Apr., 1895
WOOD, ROBERT C., 3 Robertson street, Greenock,	23 Mar., 1897
WOODBURN, J. COWAN, 18 Beechwood drive, Jordanhill, Glasgow,	23 Jan., 1900
WORKMAN, HAROLD, B.Sc., Dunluce, Dullatur,	21 Dec., 1897
WRENCH, WILLIAM G., 27 Oswald street, Glasgow,	25 Mar., 1890
WRIGHT, ROBERT, 172 Kilmarnock road, Shawlands, Glasgow,	22 Dec., 1896
WYLIE, ALEXANDER, Kirkfield, Johnstone,	26 Oct., 1897
WYLIE, WILLIAM, 33 Maxwell drive, Pollokshields, Glasgow,	26 Apr., 1898
WYLLIE, JAMES BROWN, 134 St. Vincent street, Glasgow,	G. 25 Oct., 1887 M. 26 Jan., 1897

YOUNG, J. DENHOLM, 2a Tower Chambers, Liverpool,	G. 24 Jan., 1888 M. 23 Jan., 1894
YOUNG, JOHN, Galbraith street, Stobcross, Glasgow,	27 Nov., 1867
YOUNG, THOMAS, Rowington, Whittinghame drive, Kelvinside, Glasgow,	20 Mar., 1894
YOUNG, WILLIAM L., 33/35 Stanley street, Kinning Park, Glasgow,	22 Nov., 1898
YOUNG, WILLIAM ANDREW, Millburn House, Renfrew,	26 Mar., 1895
YOUNGER, A. SCOTT, B.Sc., 8 Walmer crescent, Glasgow,	24 Nov., 1896

ASSOCIATES.

ADDIE, FRANK R., 8 Westbourne gardens, Kelvinside, Glasgow,	18 Dec., 1900
*AITKEN, THOMAS, 8 Commercial street, Leith.	
ALLAN, HENRY, 25 Bothwell street, Glasgow,	23 Jan., 1900
ANDERSON, JAMES, c/o Masson, 26 Merryland street, Govan,	24 Apr., 1900
ARMOUR, WILLIAM NICOL, 175 West George street, Glasgow,	24 Nov., 1896

BAILLIE, ARCHIBALD, 2 Balmoral terrace, Glasgow,	25 Jan., 1898
BAIN, ANDREW, 17 Athole gardens, Glasgow,	26 Oct., 1897
BAIN, W. B., 65 Waterloo street, Glasgow,	22 Jan., 1901
BARCLAY, THOMAS KINLOCH, 55 Lochleven road, Langside, Glasgow,	20 Mar., 1900
BEGG, WILLIAM, 34 Belmont gardens, Glasgow,	19 Dec., 1886
BLAIR, HERBERT J., 30 Gordon street, Glasgow,	23 Feb., 1897
BROWN, Capt. A. R., 34 West George street, Glasgow,	21 Dec., 1897
†BROWN, JOHN, B.Sc., 11 Somerset place, Glasgow,	25 Jan., 1876
BRYCE, JOHN, Sweethope cottage, North Milton road, Dunoon,	18 Jan., 1865
BURNS, Hon. JAMES C., 30 Jamaica street, Glasgow,	23 Oct., 1900
BUTLER, JAMES S., 21 Peel street, Partick, Glasgow,	22 Jan., 1901

CASSELS, WILLIAM, Cairndhu, 12 Newark drive, Pollokshields, Glasgow,	21 Feb., 1893
CLAUSSEN, A. L., 118 Broomielaw, Glasgow,	22 Jan., 1892
CLYDE, WALTER P., Messrs T. S. M'Innes & Co., Ltd., 42 Clyde place, Glasgow,	24 Oct., 1899

Names marked thus * were Associates of Scottish Shipbuilders' Association at incorporation with Institution, 1865.

Names marked thus † are Life Associates.

Dewar, James. 11 Regent Moray street, Glasgow,	22 Dec., 1897
Dobbie, W. L., 101 Waterloo street, Glasgow,	20 Dec., 1898
Doddrell, Edward E., 11 Bothwell street, Glasgow,	26 Oct., 1897
Donald, James, 123 Hope street, Glasgow,	19 Dec., 1899

Ferguson, Peter, 19 Exchange square, Glasgow,	27 Apr., 1897
Fisher, Walter L., Glenburn Iron works, Greenock,	26 Mar., 1895
Forrest, William, 114 Dixon avenue, Glasgow,	19 Feb., 1901

Galloway, James, Jun., Whitefield works, Govan	27 Oct., 1891
Gardiner, Frederick Crombie, 24 St. Vincent place, Glasgow,	20 Feb., 1900
Gardiner, William Guthrie, 24 St. Vincent place, Glasgow,	20 Feb., 1900
Goodrich, Walter Francis, 66 Victoria street, Westminster, London, S.W.,	21 Dec., 1897

Halliday, George,	21 Dec., 1897
Hardie, Thomas G., 11 Bothwell street, Glasgow,	19 Feb., 1901
Hollis, John, 29 Alexandra place, Newcastle-on-Tyne,	23 Nov., 1897

Kinghorn, William A., 81 St. Vincent street, Glasgow,	24 Oct., 1882
Kyle, John, Cathay, Forres, N.B.,	23 Feb., 1897

M'Ara, Alexander, 65 Morrison street, Glasgow,	22 Nov., 1892
Macbeth, George Alexander, 65 Great Clyde street, Glasgow,	24 Jan., 1899
MacBrayne, Lawrence, 11 Park Circus place, Glasgow,	26 Mar., 1895
MacDougall, Dugald, 1 Crosshore street, Greenock,	26 Jan., 1897
M'Gechan, Robt. K., 17 Oswald street, Glasgow,	26 Apr., 1898
M'Intyre, John, 33 Oswald street, Glasgow,	23 Feb., 1897

M'Intyre, T. W., 21 Bothwell street, Glasgow,	24 Jan., 1893
M'Leod, Norman, 53 Bothwell street, Glasgow,	20 Feb., 1900
M'Kissock, Peter, 180 Hope street, Glasgow,	19 Mar., 1901
Maclay, Joseph P., 21 Bothwell street, Glasgow,	18 Dec., 1900
M'Millan, Archibald, Dunollie, Dalmuir,	25 Jan., 1898
M'Pherson, Captain Duncan, 8 Royal crescent, Crosshill, Glasgow,	26 Jan., 1886
Mann, William, Whitecraigs, Giffnock,	20 Feb., 1900
Mercer, James B., Broughton Copper works. Manchester,	24 Mar., 1874
Millar, Thomas, Hazelwood, Langside, Glasgow,	22 Mar., 1898
Miller, T. B., Sandilands, Aberdeen,	18 Dec., 1900
Morton, Alfred, 8 Prince's square, Glasgow,	22 Feb., 1898
Mowbray, Archibald H., c/o Messrs Smith & M'Lean, Mavisbank, Glasgow,	22 Feb., 1898

*Napier, James S., 33 Oswald street, Glasgow.	
Napier, James, 33 Oswald street, Glasgow,	22 Jan., 1901

Pairman, Thomas, 54 Gordon street, Glasgow,	23 Jan., 1900
Prentice, Thomas, 175 West George street, Glasgow,	24 Nov., 1896

Raeburn, William Hannay, 81 St. Vincent street, Glasgow,	20 Feb., 1900
Reid, John, 30 Gordon street, Glasgow,	22 Dec., 1896
Riddle, John C., 8 Gordon street, Glasgow,	15 June, 1898
Rigg, William, 3 Grantly place, Shawlands, Glasgow,	22 Jan., 1889
Ritchie, James, 40 St. Enoch square, Glasgow,	22 Mar., 1898

Roberts, William Ibbotson, Rawmoor, Sheffield,	15 June, 1898
Robertson, William, Oakpark, Mount Vernon,	27 Apr., 1897
Ross, Thomas A., Glenwood, Bridge-of-Weir,	20 Mar., 1894
Roxburgh, John Archibald, 3 Royal Exchange square, Glasgow,	20 Feb., 1900

Service, George William, 175 West George street, Glasgow,	24 Nov., 1896
Service, William, 54 Gordon street, Glasgow,	23 Jan., 1900
Sloan, George, 53 Bothwell street, Glasgow,	20 Feb., 1900
Sloan, William, 53 Bothwell street, Glasgow,	20 Feb., 1900
Smith, George, 75 Bothwell street, Glasgow,	22 Jan., 1901
Smith, John, 2 Doune quadrant, Kelvinside, Glasgow,	22 Feb., 1898
Stewart, John G., 65 Great Clyde street, Glasgow,	18 Dec., 1900
Strachan, G., Fairfield works, Govan,	26 Oct., 1897

Taylor, William Gilchrist, 123 Hope street, Glasgow,	23 Jan., 1900
Thomson, William H., 32 Albert Road East, Crosshill, Glasgow,	19 Feb., 1901

Wallace, H., 544 St. Vincent street, Glasgow,	27 Apr., 1897
Warren, Robert G., 115 Wellington street, Glasgow,	28 Jan., 1896
Watson, H. J., 134 St. Vincent street, Glasgow,	
Weir, Andrew, 102 Hope street, Glasgow,	25 Jan., 1898
Whimster, Thomas, 67 West Nile street, Glasgow,	24 Oct., 1899
Wild, Charles William, Broughton Copper Company, Limited, 49-51 Oswald street, Glasgow,	24 Mar., 1896
Wrede, Frederick Lear, 25 Bentinck street, Greenock,	25 Jan., 1898

Young, John D., Scottish Boiler Insurance Company, 111 Union street, Glasgow,	19 Dec., 1882
*Young, William, Galbraith street, Stobcross, Glasgow,	

GRADUATES.

Agnew, Wm. H., Messrs. Laird Brothers, Birkenhead,	28 Nov., 1882
Ainslie, Alexander F., 50 St. Vincent cres., Glasgow,	21 Nov., 1899
Aitchison, John Wilson, 213 Watt street, Glasgow,	20 Nov., 1900
Albrecht, J. August, c/o A. Albrecht, Esq., Constontia, near Cape Town, South Africa.	23 Nov., 1897
Alexander, Robt., c/o Mrs Cowan, 287 Eglinton street, Glasgow, S.S.,	23 Oct., 1900
Alexander, William, 4 Kelvinbank terrace, Sandyford, Glasgow	19 Mar., 1901
Alison, Alexander E., Devonport, Auckland, New Zealand,	22 Nov., 1898
Allan, Frederick Wm., 1 Lawrence street, Dowanhill, Partick,	21 Nov., 1899
Allan, James, 144 Buccleuch street, Glasgow,	24 Jan., 1888
Anderson, Adam R., Bank Buildings, Renfrew,	23 Mar., 1897
Anderson, George C., 2 Florentine gardens, Hillhead, Glasgow,	24 Dec., 1895
Arbuthnott, Donald S., c/o Messrs Charles Brand & Son, 172 Buchanan street, Glasgow,	23 Oct., 1888
Arundel, Arthur S. D., Penn street works, Hoxton, London, N.,	23 Dec., 1890
Bacon, Henry Douglas,	21 Nov., 1899
Baker, Frederick, W., Station W. Balto, Maryland, U.S.A.,	20 Mar., 1894
Barba, Alfonso G., c/o Messrs. J. M. & E. Montoya, Puerto Birrio, Republic of Colombia,	22 Dec., 1896
Barty, Thomas, c/o Mrs Robertson, 264 Bath street, Glasgow,	24 Oct., 1899
Barty, Thomas Patrick William, 375 Sauchiehall street, Glasgow,	18 Dec., 1900
Bennett, Duncan, 12 Louis street, Leeds,	26 Oct., 1897
Berry, Davidson, 21 Grange ter., Langside, Glasgow,	19 Mar., 1901
Bertram, R. M., 9 Walmer road, Toronto, Canada,	24 Jan., 1899
Bianchi, Manuel, 5 Woodside quadrant, Glasgow,	21 Nov., 1899
Binley, William, Jun., Box 36, Newport, News. Virginia, U.S.A.,	21 Mar., 1899
Bisset, John, 35 Harriet street, Pollokshaws, Glasgow,	18 Dec., 1900
Black, James, 212 Main street, Gorbals, Glasgow,	18 Dec., 1900
Black, W. John, 51 Montgomerie street, Kelvinside, Glasgow,	25 Oct., 1892

Blair, Archibald, 15 Craigmore terrace, Partick,	27 Oct., 1885
Blair, Archibald, 7 Corunna street, Glasgow,	27 Oct., 1891
Blair, Frank R., Ashbank, Maryfield, Dundee,	22 Mar., 1892
Bone, Quintin George, 5 University avenue, Hillhead, Glasgow,	19 Dec., 1899
Bowie, Robert, Lugar Iron Works, Old Cumnock,	20 Nov., 1894
Bowman, W. D., 21 Kersland terrace, Hillhead, Glasgow,	22 Dec., 1891
Boyd, Guy W.,	26 Oct., 1897
Boyle, Edward S. S., 9 Arlington street, Glasgow,	25 Jan., 1898
Brand, Mark, B.Sc., Barrhill cottage, Twechar, Kilsyth,	24 Jan., 1888
Brown, Alexander Taylor, 2 Parkgrove terrace, Sandyford, Glasgow,	26 Oct., 1897
Brown, David A., 57 St. Vincent crescent, Glasgow,	23 Feb., 1897
Brown G. J. L., 2 Sandringham terrace, Ayr,	21 Mar., 1899
Brown, J. Pollock, 2 Park Grove terrace, Glasgow,	18 Dec., 1894
Brunton, Robert,	20 Feb., 1900
Bryson, William, 21 Cartvale road, Langside, Glasgow,	24 Oct., 1899
Buchanan, Joshua Miller, 7 Glenton terrace, Kelvinside, Glasgow,	21 Nov., 1899
Buchanan, Walter G., 17 Sandyford place, Glasgow,	27 Jan., 1891
Bunten, James C., Jun., Sheriff Riggs, Rutherglen,	20 Nov., 1900
Butler, James S., 21 Peel street, Partick,	22 June, 1901

Caird, William, 12 Avenell road, Highbury, London,	21 Jan., 1890
Calder, John, Lees avenue, Collingswood, New Jersey, U.S.A.,	24 Feb., 1891
Caldwell, Hugh, Oak house, Blackwood, Newport, Mon.,	27 Jan., 1891
Cameron, Angus Johnstone, Greendale, Crossloan rd., Govan,	20 Nov., 1900
Cameron, Hugh, 40 Camperdown road, Scotstoun, Glasgow,	25 Oct., 1892
Campbell, Angus, 90 Southgrove road, Sheffield,	24 Jan., 1888
Carslaw, William H., Jun., Parkhead Boiler works, Parkhead, Glasgow,	23 Dec., 1890
Carter, Douglas R., Cockburn Hotel, 141 Bath street, Glasgow,	18 Dec., 1900
Cassells, Robert D., B.Sc., 40 Nithsdale drive, Strathbungo, Glasgow,	28 Oct., 1890
Chalmers, Alex. D., Electricity works, New Brompton, Kent,	27 Oct., 1896

Cleland, John, B.Sc., Mansion house, Easterhouse,	26 Feb., 1884
Cleland, W. A., Yloilo, Philippine Islands,	25 Apr., 1893
Cochrane, James, Resident Engineer's Office, Harbour works, Table Bay, Capetown,	27 Oct., 1891
Conner, William, 174 Claythorn street, Glasgow,	20 Nov., 1900
Cowan, D. G., 5 Balgray terrace, Springburn, Glasgow,	24 Oct., 1899
Craig, Alexander, Netherlea, Partick,	26 Nov., 1895
Craig, James, Netherlea, Partick,	22 Feb., 1889
Craig, James C. M.,	22 Nov., 1889
Crawford, Archibald, 142 Eastfield street, Springburn, Glasgow,	18 Dec., 1900
Crawford, James M., 50 North Frederick street, Glasgow,	22 Nov., 1898
Crighton, J., 1 Thornwood terrace, Partick, W.,	23 Nov., 1897
Cubie, Alexander, Jun., 146 Dalmarnock rd., Glasgow,	23 Jan., 1900
Cuninghame, A. R.,	24 Oct., 1899
Cunningham, P. Nisbet, Jun., Easter Kennyhall house, Cumbernauld road, Glasgow,	22 Nov., 1898
Cuthbert, James G., 33 Cartvale road, Langside, Glasgow,	21 Nov., 1899

Davidson, Wm. J. J., Castlehill, Renfrew,	22 Nov., 1898
Davies, Percy M.,	24 Jan., 1899
Dekke, Kristian S., Bergen, Norway,	22 Dec., 1891
De Keyser, Felix, 30 Granby Terrace, Hillhead, Glasgow,	19 Dec., 1899
De Sola, Juan Garcia, Westonlee Villa, Ronhill road, Dumbarton,	20 Mar., 1900
Deveria, Lewis M. T., c/o Messrs P. M'Intosh & Son, 129 Stockwell street, Glasgow,	10 Feb., 1883
Diack, James A., 4 Rosemount terrace, Ibrox, Glasgow,	22 Jan., 1895
Dickie, James, 2 Eldon terrace, Caird drive, Partickhill, Glasgow,	19 Dec., 1899
Dobbie, Robert B., Messrs Vicker Sons & Maxim, Ltd., 32 Victoria street, Westminster, London, S.W.,	24 Oct., 1899
Dobson, James, Queen street, Kidsgrove, Staffordshire,	22 Dec., 1896
Donaldson, A. Falconer, Beechwood, Partick,	27 Oct., 1896
Douglas, Charles Stuart, B.Sc., "St. Brides," 12 Dalzell drive, Pollokshields, Glasgow,	24 Jan., 1899
Duncan, Alexander, 15 Princes street, Pollokshields, Glasgow,	23 Apr., 1901
Duncan, James Grieve, 137 Shields road, Glasgow,	22 Nov., 1898

Dunlop, Alex., 14 Derby terrace, Sandyford, Glasgow,	21 Dec., 1897
Dunn, Turner, 20 Park circus, Glasgow,	21 Feb., 1893
Dyer, Henry, c/o Mr Elliot, Balshagray avenue, Partick,	18 Dec., 1900

Edmiston, Alexander A., Ibrox house, Govan,	22 Feb., 1898

Fairley, John, Park road, Hamilton,	21 Nov., 1899
Faut, Alexander, 122 Holland street, Glasgow,	19 Dec., 1899
Feist, John Arnold,	24 Mar., 1896
Fergus, Alexander, 7 Ibrox place, Glasgow,	22 Dec., 1891
Ferguson, Lewis, Fergus villa, Paisley,	22 Jan., 1895
Ferguson, Peter, Jun., Fergus villa, Paisley,	22 Jan., 1895
Fergusson, W. L., 48 Connaught road, Roath, Cardiff,	22 Dec., 1891
Field, Edward Pearsall, 29 Queen Margaret drive, Glasgow,	21 Nov., 1899
Findlater, James, 124 Pollok street, Glasgow, S.S.,	19 Dec., 1899
Findlay, Louis, c/o Mrs Ferguson, 29 Bentinck street, Glasgow,	21 Feb., 1893
France, James, 8 Hanover terrace, Kelvinside, Glasgow,	26 Oct., 1897
Fraser, J. Imbrie, 13 Sandyford place, Glasgow,	27 Apr., 1886
Fyfe, Charles F. A., 61 Falkner street, Liverpool,	18 Dec., 1894

Galbraith, Hugh, 75 Waterloo street, Glasgow,	20 Dec., 1898
Galloway, Andrew, 11 Camphill avenue, Langside, Glasgow,	24 Oct., 1893
Gardner, Hugh, Minas Schwager, Coronel, Chili,	23 Apr., 1889
Gibb, John, 43 Waterside street, Kilmarnock,	24 Jan., 1899
Gibson, Robert E., Engineer's Department, S. Eastern and Chatham and Dover Railway, 84 Tooley street, London, S.E.,	25 Jan., 1898
Gilmour, Alexander, Barrhead,	22 Nov., 1898
Gilmour, Andrew, 3 Nursery place, Annan,	20 Dec., 1898
Goudie, Robert, Jun., 14 Alloway place, Ayr,	21 Nov., 1899
Goudie, William J., B.Sc., 92 Albert drive, Crosshill, Glasgow,	21 Dec., 1897
Gourlay, James, B.Sc., Messrs J. H. Carruthers & Co., Hamilton street, Polmadie, Glasgow,	27 Oct., 1891

GOURLAY, R. CLELAND, Endine, Oakshaw st., Paisley,	24 Dec., 1895
GOVAN, WILLIAM A. W., Westholme, West Kilbride,	18 Dec., 1894
GRAHAM, GEORGE, 1 Lawrence street, Dowanhill, Partick,	22 Nov., 1898
GRAHAM, JOHN, 15 Armadale st., Dennistoun, Glasgow,	19 Mar., 1901
GRANT, WILLIAM, Croft park, High Blantyre,	24 Oct., 1899
GRUNING, HENRY H., 3 Blakesby avenue, Ealing, W.,	20 Dec., 1898

HAMILTON, WALTER, Jun., 44 Cleveland street, Glasgow,	21 Nov., 1899
HENDERSON, CHARLES A., Corporation Electrical Department, Cotton street, Aberdeen,	24 Jan., 1899
HENDERSON, HARRY ESDON, 3 Lyra road, Waterloo, Liverpool,	22 Nov., 1898
HENRICSON, JOHN A., 3 Sandbank place, Partick,	19 Dec., 1899
HEPTING, F. W. L., 2 Albert Mansions, Crosshill, Glasgow,	20 Nov., 1894
HERSCHEL, A. E. H., 2 Glenavon terrace, Crow road, Partick,	19 Dec., 1899
HOLLAND, HENRY NORMAN, Metropolitan Electric Supply Co., Willesden Works, London, N.W.,	22 Nov., 1898
HORN, GEORGE S., 34 Annette street, Govanhill, Glasgow,	21 Nov., 1899
HORN, PETER ALLAN, 201 Kent road, Glasgow,	26 Oct., 1897
HOUSTON, PERCIVAL T., 22 Lancaster Gate, London,	22 Nov., 1898
HOUSTON, WILLIAM C., 4 Abbotsford place, Glasgow,	26 Oct., 1897
HOWIE, WILLIAM, Cathkin View, 14 Crossloan road, Govan,	23 Apr., 1901
HOWSON, GEORGE, c/o Mrs Findlay, 5 Craignethan gardens, Partick,	22 Dec., 1891
HUDSON, GERARD, 12 Sundorne road, Old Charlton, Kent,	22 Jan., 1895
HUTCHISON, ROBERT, 76 Kenmure street, Pollokshields, Glasgow,	24 Oct., 1899
HUTTON, W. R., Jun., Lenore, Park Grove, Whiteinch, Glasgow,	23 Apr., 1901

INGLIS, JOHN F., Pointhouse Shipyard, Partick,	26 Oct., 1897
INNES, W., 11 Walmer terrace, Glasgow,	22 Feb., 1898
IRONS, JAMES HAY, 4 Albert drive, Crosshill, Glasgow,	19 Feb., 1901
IRVINE, ARCHIBALD B., 3 Newton terrace, Glasgow,	20 Nov., 1894

Jack, Charles, P. M., 17 Albert drive, Pollokshields, Glasgow,	20 Nov., 1900
Johnstone, Alexander C., 7 Blackburn street, Paisley road, West, Glasgow,	25 Jan., 1898
Johnstone, Robt., c/o Mrs M'Vicar, 20 Rothesay gardens, Partick,	26 Apr., 1898
Jones, T. C., Kent Avenue, Jordanhill, Glasgow,	23 Nov., 1897
Judd, Edwin H., 1 St. Ronan's drive, Shawlands, Glasgow,	20 Dec., 1898
Kay, Alexander J., c/o Messrs Mackie & Thomson, Govan,	24 Oct., 1893
Kemp, John, 1 Thornwood terrace, Partick,	28 Oct., 1890
Kemp, Robert G., 1 Thornwood terrace, Partick,	28 Oct., 1890
Kimura, N., 5 Park terrace, Govan,	23 Apr., 1901
King, Charles A., 12 Kew gardens, Kelvinside, Glasgow,	25 Apr., 1893
King, John, 16 Lefroy street, Newcastle-on-Tyne,	26 Jan., 1886
Kinghorn, David Richard, c/o Mrs Banks, 57 St. Vincent crescent, Glasgow,	23 Oct., 1900
Kirk, John, Oakfield, University avenue, Glasgow,	20 Nov., 1894
Knox, Alex., 10 Westbank terrace, Hillhead, Glasgow,	23 Nov., 1897
Laing, Robert,	21 Feb., 1893
Lamb, Stuart, Engineer's Office, St. Enoch Station, Glasgow,	23 Jan., 1900
Lamont, Thomas W., Hawkhead works, Paisley,	22 Nov., 1892
Lauder, Thomas H., Parkhead forge, Glasgow,	19 Dec., 1893
Law, Alexander, 138 Cambridge drive, Kelvinside, Glasgow,	26 Apr., 1898
Le Clair, Louis J., 115 Donore terrace, South Circular road, Dublin,	24 Nov., 1896
Lee, John, 15 St. John street, Mansfield,	26 Jan., 1886
Leitch, William Orr, Jun., Imperial Chinese Railway, Tientsin, North China,	22 Dec., 1891
Lennox, George K.,	28 Apr., 1896
Leslie, Alfred, 148 Hill street, Garnethill, Glasgow,	23 Oct., 1900
Leslie, John, Struan, Oswald drive, Scotstounhill, Glasgow,	20 Dec., 1892
Lloyd, Herbert J., Breacan road, Builth, Wales,	21 Dec., 1897

Loader, Edmund T., Y.M.C.A. Club, 100 Bothwell Street, Glasgow,	20 Nov., 1900
Lorimer, Alexander Smith, Kirklinton, Langside, Glasgow,	21 Nov., 1899
Lorimer, Henry Dübs, Kirklinton, Langside, Glasgow,	21 Nov., 1899
Lowe, James, c/o Mrs Waddell, 33 Nithsdale road, Glasgow,	24 Oct., 1899
Lowe, Robert, 2 Maxwell terrace, Leslie street, Pollokshields, Glasgow,	22 Jan., 1901

M'Arthur, Archibald, 91 Hyndland street, Partick,	24 Jan., 1893
MacCallum, Patrick F., The Athenæum, Glasgow,	22 Nov., 1880
M'Culloch, John, 2 Willowbank crescent, Glasgow,	23 Oct., 1900
Macdonald, John F., 5 Caird Drive, Partickhill,	21 Dec., 1897
Macdonald, Robert C., 138 Garthland drive, Glasgow,	21 Nov., 1899
MacEwan, Henry, 5 Wendover cres., Mount Florida, Glasgow,	27 Oct., 1891
M'Ewan, John, 3 Norse Road, Scotstoun, Glasgow,	26 Oct., 1887
Macfarlane, Duncan, Jun., 25 St. Andrew's drive, Pollokshields, Glasgow,	26 Oct., 1897
M'Gilvray, John A., 26 Hutton drive, Govan, Glasgow,	26 Oct., 1897
M'Gregor, John L., Coatbank Engine works, Coatbridge,	28 Jan., 1896
M'Harg, W. S, The Grove, Ibrox, Glasgow,	19 Mar., 1901
M'Houl, John B., 2 Windsor terrace, Langside, Glasgow,	24 Jan., 1899
M'Intosh, George, Dunglass, Bowling,	22 Jan., 1895
M'Intosh, John, 5 Douglas terrace, Paisley,	22 Jan., 1895
M'Intyre, James N., Stalheim, Scotstounhiill, Glasgow,	20 Nov., 1900
Mackintosh, John, 7 Park quadrant, Glasgow,	18 Dec., 1894
Mackintosh, Robert D., Bellevue place, Garngad hill, Glasgow,	20 Nov., 1894
Mackay, Harry J. S., 13 Spring Head, Edgbaston, Birmingham,	22 Feb., 1898
Mackay, Lewis C., Jun., 2 Maybank street, Crosshill, Glasgow,	22 Dec., 1896
Mackay, W. Morris, 62 Cromwell street, Glasgow,	22 Jan., 1901
M'Kean, John G., 235 Bath street, Glasgow,	23 Oct., 1900
Mackie, James, 478 St. Vincent street, Glasgow,	23 Mar., 1897
Mackie, Thomas P., 27 Alexander street, Glasgow,	23 Feb., 1897
Mackie, William, 29 Thomson street, Govan,	21 Dec., 1897
M'Kinnell, Robert, 56 Dundas street, S S., Glasgow,	26 Feb., 1883

Maclaren, James Ernest, 3 Porter street, Bellahouston, Glasgow,	23 Oct., 1900
M'Laurin, James H., 34 Park circus, Ayr,	18 Dec., 1900
M'Lean, Arthur,	24 Apr., 1900
M'Lean, Joseph M., c/o Shaw, 53 South street, Huddersfield,	26 Apr., 1898
McLean, John, 4 Springfield terrace, Glasgow, S.S.,	21 Nov., 1899
Macleod, Archibald, 106 Stevenson drive, Shawlands, Glasgow,	19 Dec., 1899
Macleod, T. Torq. M., 10 Royal crescent, Glasgow,	27 Oct., 1896
M'Lellan, Alexander, Clyde Navigation Trust, 16 Robertson street, Glasgow,	18 Dec., 1900
Macmillan, Campbell, B.Sc., 32 Gibson street, Glasgow,	24 Nov., 1896
M'Nair, Andrew, Norwood, Prestwick road, Ayr,	19 Feb., 1901
M'Nicoll, Donald, Griffe Craig, Kilmalcolm,	23 Apr., 1901
M'Rae, John, 47 Palermo street, Springburn, Glasgow,	18 Dec., 1900
M'Vitae, Andrew, 4 Clutha street, Paisley road West, Glasgow,	21 Dec., 1886
M'Whirter, Anthony C., The General Electric Co., Draughting Department, Schenectady, N.Y., U.S.A.,	21 Dec., 1897
Maitland, John,	20 Nov., 1894
Maitland, John M., 214 Renfrew street, Glasgow,	22 Jan., 1901
Mather, John Boyd, Kirkhill, Mearns,	20 Mar., 1894
Melville, Alexander, Engineer's Office, St Enoch Station, Glasgow,	20 Feb., 1900
Menzies, George, 20 St Vincent crescent, Glasgow,	22 Jan., 1889
Mercer, John, c/o Mrs Duncan, 35 Crow road, Partick,	22 Oct., 1895
Millar, John S., 22 Rothesay gardens, Partick,	20 Nov., 1894
Millar, Thomas, Messrs Sir W. G. Armstrong, Whitworth & Co., Ltd., Walker Shipyard, Newcastle-on-Tyne,	25 Nov., 1884
Millar, William P., 22 Roslea drive, Dennistoun, Glasgow,	18 Dec., 1900
Miller, Alexander, 2 Ailsa terrace, Hillhead, Glasgow,	22 Nov., 1898
Miller, James, 20 Iona place, Mount Florida, Glasgow,	22 Nov., 1898
Miller, James William, 84 Portland place, London, W.,	20 Dec., 1898
Miller, John, 811 Govan road, Govan,	23 Apr., 1889
Miller, Robert F., Messrs Wardlaw & Miller, 109 Bath street, Glasgow,	25 Feb., 1890
Mitchell, Charles, 10 Berlin terrace, Pollokshields, Glasgow,	25 Jan., 1898
Mitchell, R. M., 24 Howard street, Bridgeton, Glasgow,	23 Nov., 1897
Morgan, Andrew, 20 Minerva street, Glasgow,	18 Dec., 1900
Morison, Thomas, 41 St. Vincent crescent, Glasgow,	21 Nov., 1899

Morley, James Steel, 3 Buckingham square, Govan,	20 Feb., 1900
Morrison, Arthur M., Merchiston, Scotstounhill, Glas-Glasgow,	17 Dec., 1889
Morrison, A., Alt-na-craig, Greenock,	23 Nov., 1897
Morton, Charles C., Ingleside, The Park, Waterloo, Liverpool,	25 Jan., 1898
Morton, W., Reid, Strathview, Bearsden,	26 Oct., 1897
Mowat, Magnus, Jun., Pitmain Lodge, Granville Park, Blackheath, Kent,	26 Oct., 1897
Muir, Andrew A., Horshay Engineering Works, Horshay, R.S.O., Shropshire,	22 Nov., 1898
Muir, James, 9 Garturk street, Govanhill, Glasgow,	21 Nov., 1899
Muir, James H., 76 Hill street, Garnethill, Glasgow,	26 Jan., 1892
Muirhead, William, Cloberhill, Knightswood, Maryhill, Glasgow,	28 Apr., 1891
Mundy, H. L., Ormsby Hall, Alford, Lancs.,	24 Oct., 1899
Mylne, Alfred, 116 Woodlands road, Glasgow,	26 Jan., 1897

Neil, Robert, 116 Forth street, Pollokshields, Glasgow,	20 Mar., 1900
Neill, Hugh, Jun., 44 Brisbane street, Greenock,	21 Nov., 1899
Newton, Charles A., 47 Full street, Derby,	25 Jan., 1898
Niven, John, 36 Princes square, Strathbungo, Glasgow,	22 Nov., 1898
Nowery, William, c/o Fraser, 46 Elderslie street, Glasgow,	21 Dec., 1897

Orr, J., 53 Bentinck street, Glasgow,	22 Oct., 1895
Orr, John, B.Sc., South African College, Cape Town,	26 Mar., 1895
Osborne, Hugh, 31 Broomhill terrace, Partick,	22 Dec., 1891
Osborne, Marshall, Ashlea, Clooney, Londonderry,	22 Dec., 1891

Paterson, George, 27 White street, Partick,	18 Dec., 1900
Paterson, James V., 307 Walnut street, Philadelphia, U.S.A.,	24 Jan., 1888
Paterson, Joseph Barr, 15 Eldon street, Glasgow,	22 Mar., 1898
Paton, Thomas, 1 Rosemount terrace, Ibrox, Glasgow,	20 Dec., 1892
Piggott, Joseph T., 621 Alexandra parade, Dennistoun, Glasgow,	23 Jan., 1900

POLLOCK, GILBERT F., 10 Beechwood drive, Tollcross, Glasgow,	27 Jan., 1891
POLLOK, JOHN, Portland park, Hamilton,	22 Feb., 1898
PORTCH, ERNEST C., 37 Vicars hill, Ladywell, Kent,	26 Oct., 1897
PRENTICE, HUGH, Barberton Inn, Barberton, Ohio, U.SA.,	26 Apr., 1898
PRESTON, JOHN C., Assistant Engineer, Brisbane Board of Water works, Brisbane, Queensland,	6 Apr., 1887
PRINGLE, WILLIAM S., 15 Elm place, Aberdeen,	24 Oct., 1893

RALSTON, SHIRLEY B., 34 Gray street, Glasgow,	23 Feb., 1897
RAMSAY, JOHN C., 9 Minerva Cottages, Clydebank,	19 Feb., 1901
RAPHAEL, ROBERT A., 150 Renfrew street, Glasgow,	24 Dec., 1895
REID, DAVID H., Beresford Villa, Ayr,	25 Oct., 1887
REID, HENRY P., 12 Grantly gardens, Shawlands, Glasgow,	20 Dec., 1898
REID, JAMES, 128 Dumbarton road, Glasgow,	22 Oct., 1895
REID, WALTER,	26 Feb., 1884
RICHMOND, TOM, 4 Rosemount terrace, Ibrox, Glasgow,	20 Feb., 1900
RIDDLESWORTH, W. H., B.Sc., 39 Caird drive, Partickhill, Glasgow,	24 Oct., 1899
RITCHIE, JAMES, Wraymont villas, Bloomfield, Belfast,	26 Oct., 1897
ROBERTS, JAMES, c/o Mrs Pollock, 9 Walmer ter., Ibrox, Glasgow,	23 Apr., 1901
ROBERTSON, ALEXANDER, 272 Darnley street, Pollokshields, Glasgow,	26 Oct., 1886
ROBERTSON, DAVID, Junr., B.Sc., Electrical Engineering Dept., Municipal Technical College, Bradford,	19 Dec., 1899
ROBERTSON, EDWARD F.,	28 Oct., 1890
RODGER, ANDERSON, Jun., Glenpark, Port-Glasgow,	15 June, 1898
ROSS, J. R., 64 Sandyford street, Glasgow,	25 Oct., 1898
ROY, WILLIAM, 16 De Vere Gardens, Ilford, Essex,	25 Jan., 1898
RUSSELL, JAMES, 37 Forsyth street, Greenock,	22 Dec., 1891

SADLER, JOHN, 551 Sauchiehall street, Glasgow,	23 Oct., 1900
SANGUINETTI, W. ROGER, Public Works Department, Selangor, Malay States,	20 Feb., 1900
SAYERS, W. H., 100 Bothwell street, Glasgow,	19 Mar., 1901
SCOBIE, ALEXANDER, 454 Dumbarton road, Partick,	27 Oct., 1885

Scott, John R., 51 Love street, Paisley,	21 Dec., 1897
Scott, Thomas R., 23 Lismore crescent, Edinburgh,	22 Dec., 1896
Seath, Thomas R., Sunny Oaks, Langbank,	23 Mar., 1886
Seath, William Y., Sunny Oaks, Langbank,	23 Mar., 1886
Sexton, George A., 1 Hamilton terrace, W., Partick,	24 Nov., 1896
Sharp, James R., 227 Berkeley street, Glasgow,	24 Oct., 1899
Sharpe, William, B.Sc., Engineer-in-Chief's office, Natal Government Railway, Maritzburg, Natal,	24 Dec., 1895
Shaw, John J.,	24 Apr., 1894
Sibbald, Thomas Knight, c/o Messrs Cook & Son, Ltd., Cairo, Egypt,	26 Oct., 1897
Simpson, David C., 1 Fairlie Park drive, Crow road, Partick,	20 Dec., 1892
Sloan, John Alexander, 11 Rose street, Garnethill, Glasgow,	25 Jan., 1898
Smith, Alexander, 16 Court Hill, Bearsden,	24 Nov., 1891
Smith, Charles, 3 Rosemount terrace, Ibrox, Glasgow,	24 Apr., 1894
Smith, George F., 11 Woodside terrace, Glasgow,	26 Oct., 1897
Smith, James, 11 Broomhill avenue, Partick,	18 Dec., 1900
Smith, James, 20 Dumbarton road, Glasgow,	20 Dec., 1892
Smith, James A., Union Bank house, Virginia place, Glasgow,	18 Dec., 1894
Smith, James S., 5 Mona Terrace, Gourock,	22 Nov., 1898
Sneddon, Richard M., 45a Whifflet street, Coatbridge,	21 Nov., 1899
Spalding, William, 9 Crown Circus road, Glasgow,	25 Oct., 1892
Sperry, Austin, 2100 Pacific avenue, San Francisco, U.S.A.,	23 Mar., 1897
Sproule, Frank, 76 Stevenson drive, Shawlands, Glasgow,	19 Feb., 1901
Stark, James, Penang, Straits Settlements,	22 Dec., 1891
Steel, James, 34 Old Broad street, London, E.C.,	26 Jan., 1892
Steele, David J., Davaar, Albert drive, Pollokshields, Glasgow,	20 Dec., 1898
Steven, David M., 9 Princes ter., Dowanhill, Glasgow,	15 June, 1898
Steven, J. M., Applegarth, Helensburgh,	20 Dec., 1892
Steven, John A., 12 Royal crescent, Glasgow,	22 Nov., 1881
Stevens, Clement H., c/o Messrs Blandy Bros. & Co., Las Palmas, Grand Canary,	22 Dec., 1891
Stevenson, Archibald, Yloilo, Philippine Islands,	25 Apr., 1893
Stevenson, George, c/o Reid, 145 Garthland drive, Dennistoun, Glasgow,	24 Apr., 1900
Stevenson, George, Hawkhead, Paisley,	22 Nov., 1898
Stevenson, William, Bank Chambers, Sandhill, Newcastle-on-Tyne,	25 Jan., 1881

Stewart, Henry, 26 Evelyn avenue, Bloomfield, Belfast,	26 Oct., 1897
Stirling, Andrew, Messrs Denny & Co., Engine works, Dumbarton,	21 Dec., 1875
Swan, James, 1536 Pine street, Philadelphia, U.S.A.,	23 Mar., 1897
Symington, James R., Dardene, Kilmalcolm,	21 Dec., 1886

Taylor, Andrew P., 47 St. Vincent crescent, Glasgow,	19 Dec., 1899
Taylor, J. F., c/o Young, 300 Duke street, Glasgow,	23 Nov., 1897
Thomson, Ambrose H., Surveyors' Department, Court house, Marylebone lane, London, W.,	24 Mar., 1891
Thomson, Frederick, 18 Westbank terrace, Hillhead, Glasgow,	26 Jan., 1892
Thomson, Grahame H., Jun., 2 Marlborough terrace, Glasgow,	22 Feb., 1898
Thomson, John, 2 Glenavon terrace, Partick,	23 Oct., 1900
Tod, Peter, c/o E. H. Williamson & Co., Engineers, Lightbody street, Liverpool,	27 Oct., 1885
Tod, William, c/o Mrs Murray, 187 Dumbarton road, Glasgow,	22 Feb., 1898
Turnbull, Campbell, 39 Victoria street, Westminster, London,	27 Oct., 1891
Turnbull, James, Hillcrest, Mansion-house road, Langside, Glasgow,	22 Mar., 1892
Turnbull, W. L., 190 West George street, Glasgow,	27 Oct., 1891
Turpin, C., 763 Dumbarton road, Partick, W.,	23 Nov., 1897

Walker, G. Underwood, 56 Woodhead street, Dunfermline,	21 Mar., 1893
Wallace, Hugh, Jun., Bloomfield, Dalmuir,	24 Oct., 1899
Wallace, John, 224 Meadowpark street, Glasgow,	21 Feb., 1899
Wannop, Charles H., Messrs Babcock & Wilcox, Oriel House, 30 Farringdon street, London, E.C.,	24 Feb., 1885
Ward, G. K., Rockvilla, Dumbarton,	23 Apr., 1901
Ward, John, Jun., Rockvilla, Dumbarton,	23 Apr., 1901
Watson, John, c/o Alexander Fleming, Esq., 9 Woodside crescent, Glasgow,	22 Nov., 1898
Watson, Robert, 2 Glencairn drive, Pollokshields, Glasgow,	22 Mar., 1881
Watt, Harry, 2 Cambridge terrace, Pollokshields, Glasgow,	20 Dec., 1892

Watt, Robert D., Messrs Butterfield & Swire, French Bund, Shanghai, China,	27 Apr., 1880
Weddell, Alexander H., B.Sc., Park villa, Uddingston,	22 Dec., 1896
Welsh, George Muir, 3 Princes gardens, Dowanhill, Glasgow,	21 Dec., 1897
Wharton, Fred.,	26 Oct., 1897
White, Hedley G., 3 Glenan gardens, Helensburgh,	24 Jan., 1899
Whitehead, John, Eccleston, Wallace st., Kilmarnock,	18 Dec., 1883
Whitelaw, Andrew H., 14 West End Park Street, Glasgow,	20 Nov., 1900
Williams, R. R., 17 Newton street, Glasgow,	20 Feb., 1900
Williamson; Alexander, Craiglarnet, Greenock,	20 Nov., 1900
Wilson, John H., 4 Underwood, Paisley,	27 Oct., 1896
Wilson, Thomas, 66 Alexandra parade, Glasgow,	20 Feb., 1900
Wilson, W. Renfrew, B.Sc., Thorncliff, Greenock,	24 Oct., 1899
Woods, Joseph, 58 Dudley road, Ilford, Essex,	25 Feb., 1896

Young, David H., 30 Albert drive, Pollokshields, Glasgow,	20 Nov., 1900
Young, James M., 39 King street, Pollokshaws, Glasgow,	22 Jan., 1901
Young, John, Jun., Fernbank, Kirkintilloch,	23 Nov., 1897

INDEX.

5.

PLATE I.

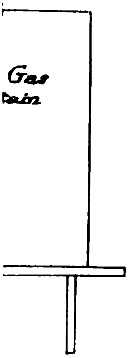

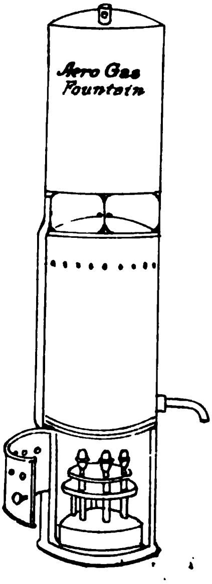

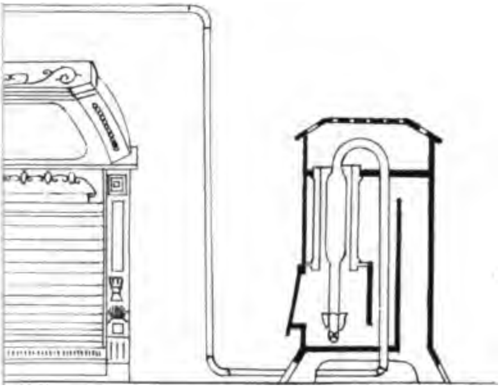

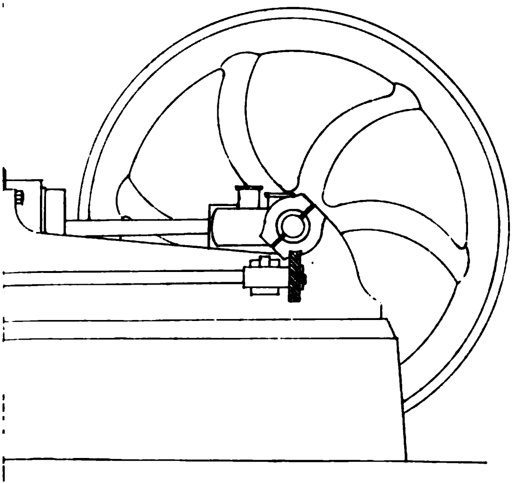

ROBERT GARDNER & Cº.
ENGINEERING LITHOGRAPHERS, GLASGOW